International Journal of Current Engineering and Technology
E-ISSN 2277 – 4106, P-ISSN 2347 – 5161
Available at http://inpressco.com/category/ijcet

Research Article

Effect of process parameters (V, S, t) on surface roughness (R_a) in archimedes surface machining by ball nose end mill on Super MC CNC machine

Nguyen Huy Kien , Pham Van Dong, Tran Ve Quoc, Nguyen Hong Son, Nguyen Huu Phan*

Hanoi University of Industry, Vietnam

Received 02 Jan 2019, Accepted 05 March 2019, Available online 09 March 2019, **Vol.9, No.2 (March/April 2019)**

Abstract

Archimedes arches are widely used in shaping the surface of cutting tools, particularly cutting tools for machining Gleason spiral bevel gears. Relieving surfaces are often machined by specialized machines, but now digital-controlled tools are also used to machine Archimedes relieving surface. However, there is a lack of database for selecting the appropriate set of technological process parameters for machining on CNC machine, thus current actual manufacturing requirements cannot be met. The paper presents the simultaneous effect of process parameters (V, S, t) on surface roughness (Ra) when machining Archimedes surface of end mill tooth of Gleason spiral bevel gears by ball nose end mill on the Super MC CNC machine. Research findings are the basis for technologists to select an Archimedes arch machining method and appropriate process parameters to increase surface quality, precision and productivity in Archimedes surface machining on the Super MC CNC machine.

Keywords: *Process parameters, roughness, Archimedes, CNC machine, relieving.*

1. Introduction

The drive of spiral bevel gears possesses many advantages: smooth operation, high output, great load bearing ability, etc. The machining of the drive of spiral bevel gears depends on a number of factors such as appropriate machines, equipment and tools for cutting gears. In the world, many countries such as Russia, U.S, Germany, Ukraine, Japan, Taiwan, etc. have had necessary cutting machines, equipment and tools for machining Klingelnberg, Oerlicon, Craven Brother, Gleason, etc. spiral bevel gears. In fact, Gleason spiral bevel gears are the most used ones. To machine such gears, it is required to use gear machining tools with Archimedes relieving surface as the rear surface of end mill tooth.

The Archimedes rear surface of end mill tooth of tools for cutting Gleason spiral bevel gears plays a very important role. The roughness of end mill tooth rear surface significantly affects the roughness of gear side of the gears after machining. Therefore, reducing roughness value when machining the rear surface of end mill tooth will ensure the quality of gear-tooth side surface.

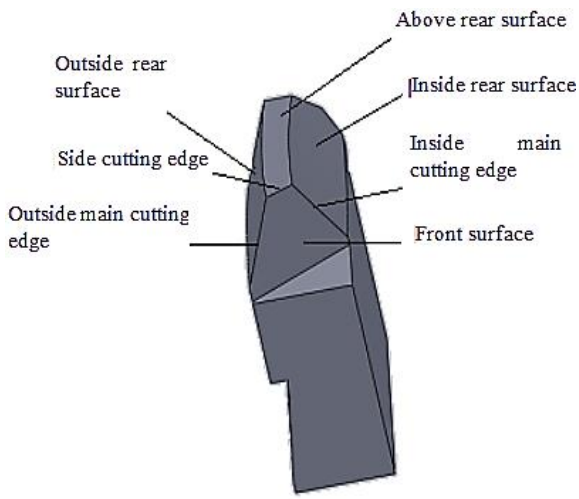

Figure 1 End mill tooth of Gleason spiral bevel gears

The quality of workpiece surface after being machined on the CNC machine depends on various factors, such as materials, machining methods, cutting tools, process parameters, etc. With unchanged machining conditions, equipment and materials, to increase the productivity, quality and precision of workpiece surface after machining, it is very essential to select appropriate process parameters. Evaluation of effect of process parameters on surface roughness in end mill on the Super MC CNC machine has its high practical

*Corresponding author's ORCID ID: 0000-0001-8698-4941
DOI: https://doi.org/10.14741/ijcet/v.9.2.4

meaning, assisting choice of appropriate process parameters to increase the quality of product surface. This research evaluates the simultaneous effect of the following parameters: cutting velocity (V), feed (S) and depth of cut (t) on surface roughness (R_a) when milling Archimedes arches on the Super MC CNC machine.

The relationship between surface roughness (R_a) and cutting parameter (V, S, t) is presented by the formula:

$$R_a = C_p . V^a . S^b . t^c \quad (1)$$

Of which: C_p is a constant; a, b, c are exponents. Experimental methods are used to identify constant C_p and exponents a, b, c.

2. Experiments

2.1. Experimental equipment and machining materials

2.1.1. Machining equipment and cutting tools

- Machining equipment: Super MC CNC machining machine made in Taiwan (figure 2).

Figure 2 Super MC CNC milling machine

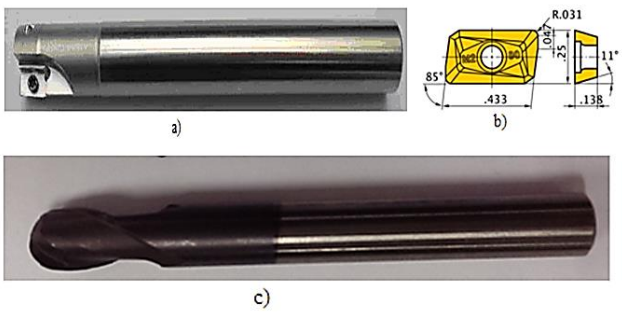

a) Roughing end mill handle, b) Alloy sheet, c) Ball nose end mill

Figure 3 Cutting tools for experiments

- Cutting tools:

+ Rough milling with end mill, 02 teeth, handle diameter d_c= 16 mm, cutting position diameter d = 17 mm (figure 3a). A category 3 carbide alloy sheet with surface coating is attached to the end mill with marking APMT 1135 PDER M2 of Mitsubishi (figure 3b).

+ Finishing with ball nose end mill, radius r = 4 mm, 02 cutting edges, marking: J01055318, NACHI – Japan (figure 3c).

2.1.2. Machining materials and quenching

- Machining materials are P18 high-speed steel, its chemical components are analyzed with spectral analysis, analysis results are presented in Table 1.

Table 1 Chemical components of machining materials (%)

Materials	P18
C	0.73⍰0.80
W	17.0⍰18.5
Mo	1
Cr	3.80⍰4.40
V	1.00⍰1.40
Co	0.5

Images of workpieces for experiment presented in figure 4

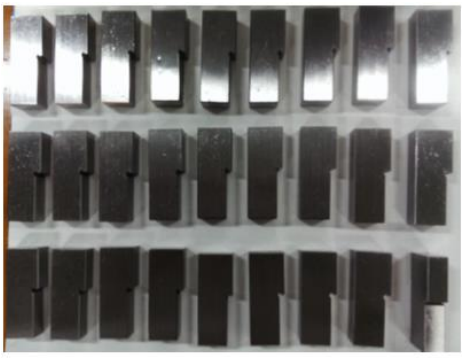

(a)

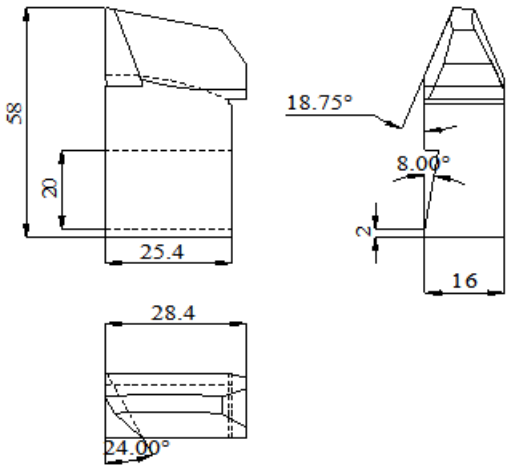

(b)

a) Workpieces for experiment; b) Detailed drawing of end mill tooth of Gleason spiral bevel gear 9”
- Coolant solution: Emunxy 4%, capacity: 20 liter/minute, directly pouring.

Figure 4 Samples for experiment

2.1.3. Roughness measuring instrument

- Mitutoyo SJ – 400 roughness tester: Workpieces are laid on shim (figure 5a) then on the attachment table of the roughness tester (figure 5b).
- Measuring parameters: Roughness evaluation criterium R_a, under ISO standard; standard length: 0.8 mm, measured on 5 gaps; type of measuring head: Diamond, contact measurements; pressure of measurement: 0.75 N; speed: 0.05 mm/s.

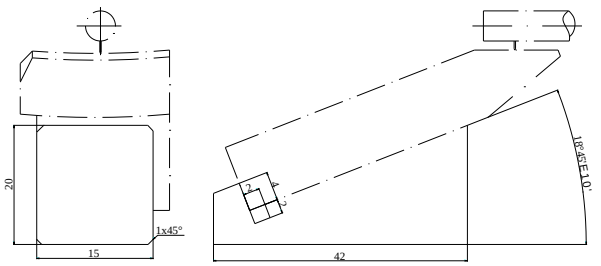

(a)

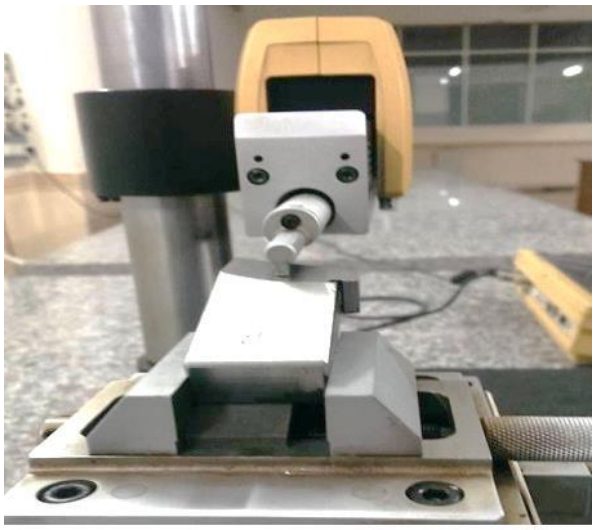

(b)

a) Shim drawing; b) Attachment and roughness tester on SJ-400

Figure 5 Roughness measurement

2.2. Experimental methods

The research was implemented with 9 tests, each of which was carried out on 3 samples with 27 samples in total. Machining materials were P18 high-speed steel whose chemical components were identified by spectral analysis. Experimental least squares method was used, regression equation was chosen, test parameters were identified then experiments are implemented. Tested workpieces with their surfaces machined ensure size and precision as required. MasterCAM Mill X5 was used to build a milling program as specifically illustrated in figure 6; workpiece milling was implemented on the Super MC CNC machine. After milling process, the workpieces were cleaned, placed on attachment table of Mitutoyo SJ-400 roughness tester (figure 5) so that roughness could be measured, tested and evaluated. Each sample had 3 positions measured, the result was the average value of measurements at those 3 positions. Matlab and Excel were used to calculate and create formulas to determine the relationship between process parameters (V, S, st) with surface roughness of workpieces after machining (R_a).

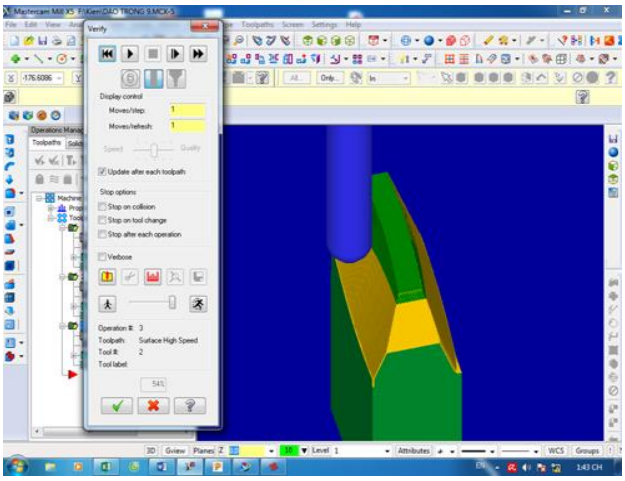

Figure 6 Illustration of Archimedes face milling of end mill tooth of Gleason spiral bevel gears

2.3. Basis for evaluating experimental figures

* Identifying regression equation

To study the relationship between process parameters and surface roughness of workpiece, the author team used least squares method with variable k and regression function:

$$y = a_0 + a_1 x_1 + a_2 x_2 + ... + a_k x_k \quad (2)$$

* Number of tests and test parameters

• *Number of tests:*
- Relationship among parameter is described in the diagram in figure 7:

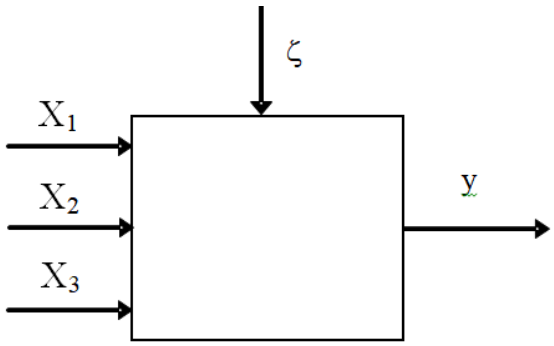

Figure 7 Relationship diagram between input and output parameters

+ Input controllable variables X_i:

X_1: Cutting velocity V (m/min)
X_2: Feeds S (mm/min)
X_3: Depth of cut t (mm)

+ Output controlled variable:

y: Surface roughness R_a (μm)
+ Uncontrolled variable:
ζ: Random variable

- With the use of experimental planning method level 1, the number of tests is determined [6] by the following formula: $N = 2^k$

With input variable k = 3, we have main number of tests $N = 2^3 = 8$. To increase the precision, the author team implemented 1 more test in the center. Total number of tests N = 8 + 1 = 9.

• Test parameters

On the basis of machine's specifications, machining materials, allowable scope of use of cutting tools as determined by manufacturer, etc., process parameters for the research were selected in the following range:

+ Cutting velocity V: 50 – 63 m/min
+ Feed S: 250 – 300 mm/min
+ Depth of cut t: 0.2 – 0.5 mm

The process parameters are presented in table 2.

Table 2 Experimental process parameters

Parameters	Cutting velocity V (m/min)	Feed S (mm/min)	Depth of cut t (mm)
Minimum values	50	250	0.2
Maximum values	63	300	0.5

The relationship between roughness and process parameters is presented by formula (1):

$R_a = C_p.V^a.S^b.t^c$

Taking logarithm of radix e in equation (1), we have:

$$\ln(R_a) = \ln(C_p) + a.\ln(V) + b.\ln(S) + c.\ln(t) \quad (3)$$

Setting $y = \ln(R_a)$; $a_0 = \ln(C_p)$; $a_1 = a$; $a_2 = b$; $a_3 = c$; $x_1 = \ln(V)$; $x_2 = \ln(S)$; $x_3 = \ln(t)$

We have: $y = a_0 + a_1x_1 + a_2x_2 + a_3x_3$
Upper level is $x_i^{(t)}$, we have: $x_i^{(t)} = \ln x_{i\,max}$;
Lower level is $x_i^{(d)}$: $x_i^{(d)} = \ln x_{i\,min}$;
Base level is $x_i^{(0)}$: $x_i^{(0)} = \frac{1}{2}(\ln x_{i\max} + \ln x_{i\min})$;

With range ρ_i, we have: $\rho_i = \frac{1}{2}(\ln x_{i\max} - \ln x_{i\min})$

After calculation, encoded values of test parameters are presented in table 3.

Table 3 Encoded values of test parameters

Factors	x_1	x_2	x_3
Upper level	4.139955	5.7037825	-0.693147
Lower level	3.916812	5.5214609	-1.609438
Base level	4.028383	5.6126217	-1.151293

2.4. Experimental results

After chemical components of machining materials were analyzed, specific workpieces were created, set up and implemented. Images of workpieces after being machined are in figure 8.

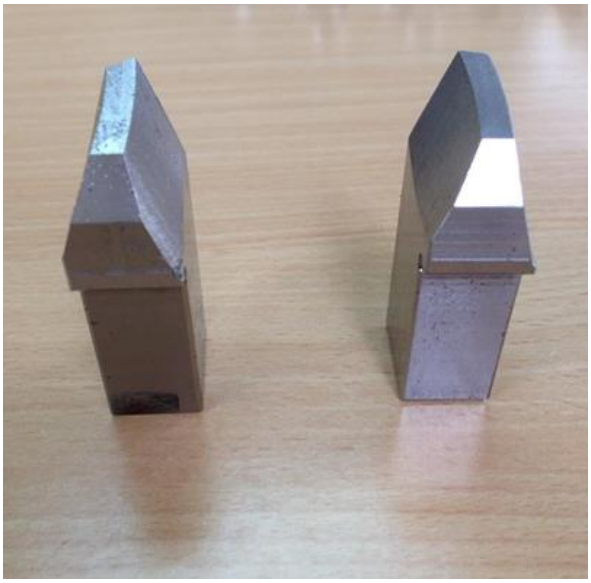

Figure 8 Images of workpieces after being machined

After cleaned workpieces were machined, Archimedes surface roughness was measured, tested and evaluated. Roughness measurements are presented in table 4.

Table 4 Experimental results

Ex. No.	Samples	Encoded variables			V	S	t	R_a	$\overline{R_a}$
		x_1	x_2	x_3					
1	1	-1	-1	-1	50	250	0.2	1.90	1.58
	2							1.44	
	3							1.39	
2	4	+1	-1	-1	63	250	0.2	0.85	0.98
	5							1.05	
	6							1.04	
3	7	-1	+1	-1	50	300	0.2	3.89	3.98
	8							3.93	
	9							4.13	
4	10	+1	+1	-1	63	300	0.2	1.55	1.87
	11							2.02	
	12							2.04	
5	13	-1	-1	+1	50	250	0.5	2.98	2.82
	14							2.74	
	15							2.74	
6	16	+1	-1	+1	63	250	0.5	1.55	1.67
	17							1.63	
	18							1.82	
7	19	-1	+1	+1	50	300	0.5	4.43	4.22
	20							4.45	
	21							3.78	
8	22	+1	+1	+1	63	300	0.5	2.57	2.58
	23							2.57	
	24							2.59	
9	25	0	0	0	56	274	0.32	1.40	1.82
	26							2.00	
	27							2.07	

Table 5 Results after taking logarithm of test parameters

Ex. No.	V (m/min)	S (mm/min)	t (mm)	R_a (μm)	$Ln(V)x_1$	$Ln(S)x_2$	$Ln(t)x_3$	$Ln(R_a)y$
1	50	250	0.2	1.58	3.91202	5.52146	-1.6094379	0.45531
2	63	250	0.2	0.98	4.14313	5.52146	-1.6094379	-0.02020
3	50	300	0.2	3.98	3.91202	5.70378	-1.6094379	1.38212
4	63	300	0.2	1.87	4.14313	5.70378	-1.6094379	0.62594
5	50	250	0.5	2.82	3.91202	5.52146	-0.6931472	1.03674
6	63	250	0.5	1.67	4.14313	5.52146	-0.6931472	0.51083
7	50	300	0.5	4.22	3.91202	5.70378	-0.6931472	1.43984
8	63	300	0.5	2.58	4.14313	5.70378	-0.6931472	0.94650
9	56	274	0.32	1.82	4.02535	5.61313	-1.1394343	0.60067

2.5. Experimental figure planning

According to least squares method, we have a general regression function:

$y = a_0 + a_1 x_1 + a_2 x_2 + ... + a_k x_k$

Identifying $a_0, a_1, a_2 ... a_k$ so that S has the smallest value:

$$S^2 = \sum_{i=1}^{i=k} [y_i - y'_i]^2 \quad (4)$$

Values a_0, a_1, a_2,... a_k are corresponding coefficients of matrix [A]:

$$[A] = \begin{bmatrix} a_0 \\ a_1 \\ a_2 \\ a_3 \end{bmatrix}$$

With: $[X] . [A] = [Y]$ (5)

- Input parameter matrix [X] is the logarithm of radix e of values V, S, t used in tests.

- Output parameter matrix [Y] has coefficients being logarithm of radix e of roughness values measured on test samples.

Multiplying two sides of (5) with transpose X^T of matrix X:

$[X]^T.[X].[A] = [X]^T . [Y]$
Setting $[M] = [X]^T . [X]$, we have:
$[M] . [A] = [X]^T.[Y]$

Assuming det(M) ≠ 0, [M] is an invertible matrix, we have:

$$[A] = [M]^{-1}.[X]^T.[Y] \quad (6)$$

Taking logarithm of radix e of values V, S, t and R_a, we have the results as presented in table 5.

From Table 5 and regression equation (2) we have:

$$[X]=\begin{bmatrix} 1 & x_{11} & x_{12} & .. & . & x_{1k} \\ . & . & . & .. & . & . \\ . & . & . & .. & . & . \\ 1 & x_{n1} & x_{n2} & .. & . & x_{nk} \end{bmatrix}$$

$$\rightarrow [X]=\begin{bmatrix} 1 & 3.91202 & 5.52146 & -1.6094379 \\ 1 & 4.14313 & 5.52146 & -1.6094379 \\ 1 & 3.91202 & 5.70378 & -1.6094379 \\ 1 & 4.14313 & 5.70378 & -1.6094379 \\ 1 & 3.91202 & 5.52146 & -0.6931472 \\ 1 & 4.14313 & 5.52146 & -0.6931472 \\ 1 & 3.91202 & 5.70378 & -0.6931472 \\ 1 & 4.14313 & 5.70378 & -0.6931472 \\ 1 & 4.02535 & 5.61313 & -1.1394343 \end{bmatrix} \quad [Y]=\begin{bmatrix} 0.45531 \\ -0.02020 \\ 1.38212 \\ 0.62594 \\ 1.03674 \\ 0.51083 \\ 1.43984 \\ 0.94650 \\ 0.60067 \end{bmatrix}$$

Using Excel to calculate, we have matrix [A]:

$$[A]=\begin{bmatrix} -7.52080 \\ -2.43107 \\ 3.30556 \\ 0.40542 \end{bmatrix}$$

Then we have coefficients of the regression equation:

a_0 = -7.52080 → $C_p = e^{-7.52080}$ = 0.0005417
a_1 = -2.43107; a_2 = 3.30556; a_3 = 0.40542

So the regression equation is:

$$y = -7.52080 - 2.43107x_1 + 3.30556x_2 + 0.40542x_3 \quad (7)$$

Relation equation between roughness R_a and process parameters:

$$\mathbf{R_a} = 0.0005417.\ \mathbf{V}^{-2.43107}.\ \mathbf{S}^{3.30556}.\ \mathbf{t}^{0.40542} \quad (8)$$

2.5.2. Evaluating the accuracy of the regression function

• Evaluating the accuracy

The accuracy is evaluated by [6] the formula:

$$r = \frac{\sigma_y^2 - \sigma'^2_y}{\sigma_y^2} \quad (9)$$

Of which: $\sigma_y^2 = \frac{1}{N-1}.\sum_1^n (y_i - y_{itb})^2$

$\sigma'^2_y = \frac{1}{N-1}.\sum_1^n (y_i - y'_i)^2$

With: y_i - logarithm of radix e of roughness R_a, (y_i = ln(R_{ai}));
$\overline{y_i}$ - average value of logarithm of radix e of roughness R_a as measured in the experiments;
y_i' - logarithm of roughness R_a under regression function;
N - number of tests,

By using Excel, we can calculate the accuracy:

$$\sigma_y^2 = \frac{1}{N-1}\sum_1^n (y_i - \overline{y}_i)^2 = \frac{1}{9-1} \times 1.76313 = 0.22039$$

$$\sigma'^2_y = \frac{1}{N-1}\sum_1^n (y_i - y'_i)^2 = \frac{1}{9-1} \times 0.13188 = 0.01649$$

So the accuracy *r* is:

$$r = \frac{\sigma_y^2 - \sigma'^2_y}{\sigma_y^2} = \frac{0.22039 - 0.01649}{0.22039} = 0.925$$

Accuracy r = 92.5%

• Testing coefficients a_i

- Identifying residual variance S_r: $S_r^2 = \frac{S^2(A)}{N-k-1}$ (10)

Of which:
N - number of tests (N = 9);
k - number of parameters to determine (except for a_0).

$S^2(A)$ = ([Y]-[X].[A])^T. ([Y]-[X].[A])

Using Excel to solve matrix problems, we have: $S^2(A)$ = 0.13157

Therefore: $S_r^2 = \frac{S^2(A)}{N-k-1} = \frac{0.13157}{9-3-1} = 0.02631494 \Rightarrow S_{du}$ = 0.16221879

- Identifying the existence of coefficients a_i:
Existing coefficients a_i [6] were identified in the formula:

$$\left|t_{cal}^i\right| = \left|\frac{a_i}{S_r\sqrt{m_{ii}}}\right| \geq t_{table}(N-k-1, r) \quad (11)$$

Of which: m_{ii} term no. ii (main diagonal) of matrix M^{-1} with: [M] = [X]^T. [X];

$$[M]^{-1} = \begin{bmatrix} 626.5802 & -37.69980 & -84.42540 & 0.68454 \\ -37.69980 & 9.36084 & 0.00014 & 0.00013 \\ -84.42540 & 0.00014 & 15.04180 & -0.00005 \\ 0.68454 & 0.00013 & -0.00005 & 0.59549 \end{bmatrix}$$

We have:

$$\left|t_{cal}^0\right| = \left|\frac{a_0}{S_r\sqrt{m_{11}}}\right| = \left|\frac{-7.52080}{0.16221879.\sqrt{626.5802}}\right| = |-1.8521| = 1.8521$$

$$\left|t_{cal}^1\right| = \left|\frac{a_1}{S_r\sqrt{m_{22}}}\right| = \left|\frac{-2.43107}{0.016221879.\sqrt{9.36084}}\right| = |-4.8982| = 4.8982$$

$$\left|t_{cal}^2\right| = \left|\frac{a_2}{S_r\sqrt{m_{33}}}\right| = \left|\frac{3.30556}{0.016221879.\sqrt{15.04180}}\right| = |5.2540| = 5.2540$$

$$\left|t_{cal}^3\right| = \left|\frac{a_3}{S_r\sqrt{m_{44}}}\right| = \left|\frac{0,40542}{0.016221879.\sqrt{0.59549}}\right| = |3.2387| = 3.2387$$

- Searching in Student's t-distribution [6] with t_{table} (N-k-1; r), accuracy r = 92.5%; N-k-1 = 5

After the search we have $t_{table}(5\,;\,90) = 1.4759$ and $t_{table}(5\,;\,95) = 2.015$
By using interpolation method, we have $t_{table}(5\,;\,92.5) = 1.713104$

Thus: $\left|t_{cal}^{i}\right| = \left|\dfrac{a_i}{S_r\sqrt{m_{ii}}}\right| \geq t_{table}(N-k-\mathbf{1}, r)$ with i = 0÷3

Therefore, coefficients a_i truly exist, regression equation (7) exists so there exists a relationship between surface roughness and process parameters (V, S, t) as follows:

$$\mathbf{R_a} = 0.0005417.\ \mathbf{V}^{-2.43107}.\ \mathbf{S}^{3.30556}.\ \mathbf{t}^{0.40542}$$

2.5.3. Relationship graph of roughness and process parameters

* Using Matlab to draw a graph describing the relationship between roughness R_a and 2 values of process parameters. Relationship graph of R_a and V & S (figure 9), relationship graph of R_a and V & t (figure 10); relationship graph of R_a and S & t (figure 11).

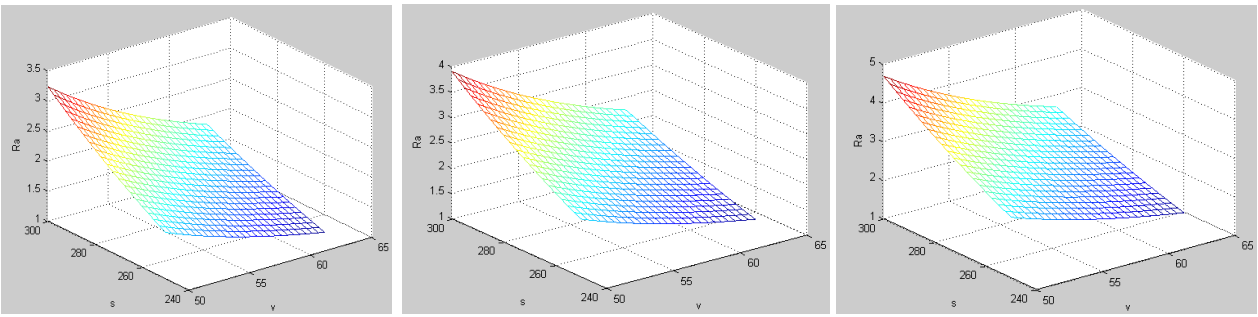

a) with t =0.2 mm b) with t =0.32 mm b) with t =0.5 mm

Figure 9. Relationship graph of R_a and V & S

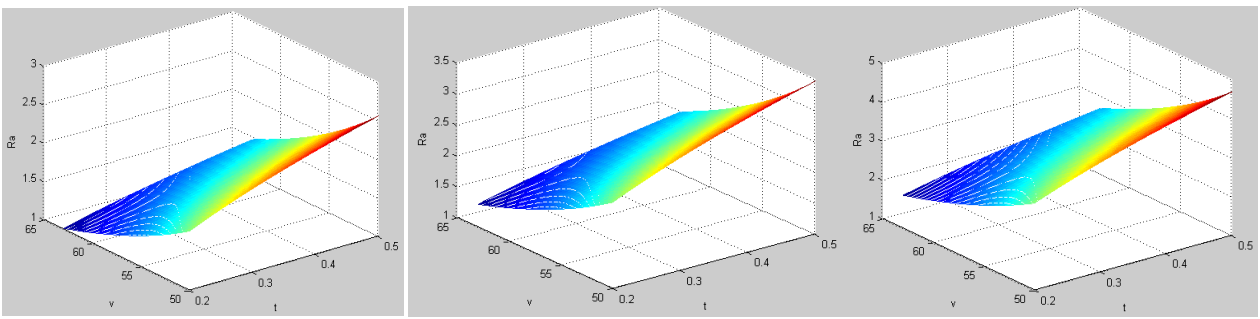

a) with S = 250 mm/min b) with S = 274 mm/min b) with S = 300 mm/min

Figure 10. Relationship graph of R_a and V & t

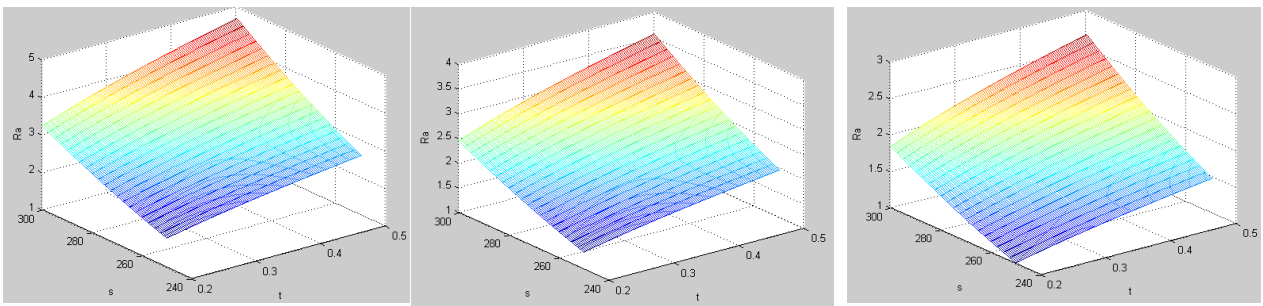

a) with V = 50m/min b) with V = 56m/min c) with V = 63m/min

Figure 11. Relationship graph of R_a and S & t

Comment: After analyzing graphs in figures 9, 10, 11 and formula (8), we can see that cutting velocity V is inversely proportional with roughness value, feed (S) and depth of cut (t) are proportional with roughness value; feed affects roughness Ra the most, followed by cutting velocity V, depth of cut (t) has the smallest effect. Research findings are appropriate to findings of published scientific works.

Conclusion

- By conducting experiments, the mathematical relationship between process parameters (V, S, t) and Archimedes surface roughness after end milling has been determined and presented in the following formula:

$$\mathbf{R_a} = 0.0005417.\ \mathbf{V}^{-2.43107}.\ \mathbf{S}^{3.30556}.\ \mathbf{t}^{0.40542}$$

- The existence of coefficients of the regression equation can be evaluated with accuracy r = 92.5%.
- According to research findings, when Archimedes surface is milled on the Super MC CNC machining center, the cutting velocity is inversely proportional with workpiece surface roughness value while feed and depth of cut are proportional with workpiece surface roughness value. Of which, feed (S) affects surface roughness (R_a) of workpiece after machining the most, followed by cutting velocity (V) and depth of cut (t), respectively.
- Research findings help technical staffs calculate, select appropriate process parameters to increase productivity, surface quality, and machining precision in Archimedes surface milling on Super MC CNC machining center.

References

Nguyen Huy Kien, Pham Van Dong, Pham Van Bong, Tran Van Dich (2014), *Research on effect of cutting parameters on surface roughness during end milling on CNC milling machine;* Journal of Science and Technology, Hanoi University of Agriculture, No. 22

Hoang Xuan Thinh, Pham Van Dong, Pham Van Bong, Nguyen Huy Kien (2014), Duong Dinh Nong, *Research on effect of cutting parameters on surface roughness during end milling on CNC milling machine;* Journal of Science and Technology, Hanoi University of Agriculture, No. 22

Hoang Xuan Thinh, Pham Van Dong, Pham Van Bong, Nguyen Huy Kien, Duong Dinh Nong (June 2017), *Effect of cutting parameters (V, S) on surface roughness during relieving milling on Super MC CNC center;* Journal of Science and Technology, Hanoi University of Agriculture, No. 40

Nguyen Huy Kien, Hoang Xuan Thinh, Pham Van Dong, Cao The Anh (2018), *Research on effect of cutting parameters (S, t) on surface roughness R_a when end milling Archimedes surface on Super MC CNC center;* pages 253-262, Proceeding of the 5th National Conference on Mechanical Science & Technology

Nguyen Trong Binh, Nguyen The Dat, Tran Van Dich (2002), *Machine creating technology*, Science and Technics Publishing House, Hanoi

Nguyen Doan Y (2003), *Experimental*, Science and Technics Publishing House, Hanoi

Tran Van Dich (2010), *Methods for identifying machining precision*, Science and Technics Publishing House, Hanoi

Tran Sy Tuy, Nguyen Duy, Trinh Van Tu (1997), *Metal cutting principles*, Science and Technics Publishing House, Hanoi

Tran The Luc, Trinh Minh Tu, Banh Tien Long (1987), *Gear machining tool design*, Science and Technics Publishing House, Hanoi

Mike S. Lou, Joseph C. Chen, Caleb M. Li (1999), *Surface Roughness prediction technique for CNC End Milling*, Journal of industrial technology

S.-H. Suh, D.-H. Jung, E.-S. Lee, S.-W. Lee (2003), *Modelling, Implementation, and Manufacturing of Spiral Bevel Gears with Crown,* The International Journal of Advanced Manufacturing Technology, Spinger – Verlag London Limited

M. Alauddin, M. A. El Baradie V M. S. J. Hashmi (2005), *Optimization of surface finish in end milling Inconel*, Journal of Materials Processing Technology

Faydor L. Litvin and Alfonso Fuentes (2004), *Gear Geometry and Applied Theory*, Cambridge University Press

J. P. Holman (2001), *Experimental Methods for Engineers.* Mc Graw-Hill