International Journal of Current Engineering and Technology
E-ISSN 2277 – 4106, P-ISSN 2347 - 5161

Available at http://inpressco.com/category/ijcet

Research Article

Face Recognition using Neural Network & Principal Component Analysis

Ganesh V. Linge[Ȧ*] and Minakshee M. Pawar[Ȧ]

[Ȧ]Department of Electronics & Telecommunication, SVERI's College of Engineering, Pandharpur, India

Accepted 25 May 2014, Available online 01 June 2014, **Vol.4, No.3 (June 2014)**

Abstract

The Human face image is contexture multidimensional point of perception version and by developing computational version for face recollection is rigid. The paper presents two methods for face identification, feature extraction is first method and classification is the second method. The classification is based on the Neural Network and feature is extraction is by Principal Component Analysis. The relevant information can be extracted by using the Eigenfaces, which are tenacious for face recognition. For face image identification the Eigenface image recognition the Eigen face perspective uses Principal Component Analysis (PCA) algorithm. The proposed system tested on 165 images from Yale face database. Test results gave a recognition rate above the 97%.

Keywords: *Principal Component Analysis, Eigenface, Artificial Neural Network, MATLAB.*

1. Introduction

A face recognition system is a computer perception and it automatically recognizes a human face image from the face image available in the database. The face recognition is a technique manipulates on intensity and the face images are used by human beings for the purpose of personal identification. The facial images are convoluted objects with characteristics that can vary over time. The human beings have efficiency to identify the face images and identity of human at the encouragement of the second. This paper is presents face recognition based on Neural Network and Principal Component Analysis based algorithm for consistent and difficult face recognition.

2. Related Work

The face recognition is by two standards, the Principal Component Analysis and Neural Network. The three main phases for the face recognition are preprocessing, dimensionality reduction and classification.

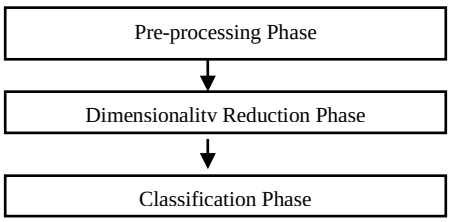

Fig.1 Phases for Face Recognition

The feature extraction is by the Principal Component Analysis for three main reasons- to reduce data handling time, to extract the features from the data and to release redundancy.

The face recognition is by done using the two main processes. The first process is to extract the feature vector from face image information like eyes, nose, mouth and chin with the assist of having ability of being reshaped templates and significant mathematics.

The elementary statistics is accumulated and transferred into a feature vector. Yullie and Cohen used capable of being reshaped templates in contour extraction of face images.

The second method is based on information theory concepts namely Principal Component Analysis method. In this method, the statistics that represent a face that draw from the entire face image. Based on the Karhunen-Loeve extension in pattern recognition, Kirby and Sirovich have shown that any particular face can be represented in terms of a best coordinate system termed a Eigenfaces. These are the Eigen functions of the average covariance of the ensemble of faces. Later, Turk and Pentland proposed a face recognition method based on the eigenfaces approach.

The unsupervised face recognition presents in this paper which is independent of desirable geometry and mathematical estimation. The face recognition is implemented based on Eigenface, Principal Component Analysis and Artificial Neural Network.

The relevant information extracted by Principal Component Analysis based on information theory approach. The purpose of Artificial Neural Network is the classification of information. The Neural Network has capability to learn from input information due to this reason it is used.

2.1 Principal Component Analysis

The Principal Component Analysis or PCA is used to obtain the features from very high degree quality image of human face which is directed at the front. All the training

*Corresponding author: **Ganesh V. Linge**

structures of same size and ingradients are narrated as the basic face image database. The Yale face database used for the face recognition purpose.

The restricted face can be economically represented along the eigenfaces coordinate space and with near approach to perfection converted using a small assembly of eigenfaces. The human face is motivated to separate face templates called eigenfaces which can be considered as a bunch of features that to inscribe the difference between face images. Once a set of Eigenface is calculated, a face image can be with near to approach perfection reconstructed using a weighted combination of the Eigen-faces. The impulsion weights form a feature vector for face depiction and identification. The well ordered distribution is then explained by distinguishing the distances between the weight vectors of the input image and the face images from the database.

All the Eigen-faces calculated from the original images, one can reassemble the original image from the Eigen-faces so that it matches the original image precisely.

2.2 Recognition Method

Principal Component Analysis applied directly to face images with Euclidian distance as a classification measure, as shown in figure bellow. The correlation matrix was computed from 8 training faces and for classification first 8 eigenvectors of the correlation matrix are used above 96% of test faces was recognized successfully. This result corresponds to method as shown in figure bellow.

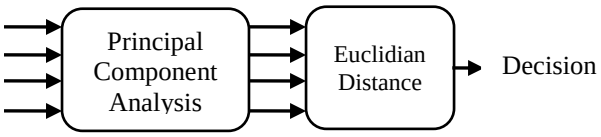

Fig.2 Recognition Method

2.3 Neural Network

The Neural Network based face recognition approaches include the use of convolutional Neural Networks, radial basis neural networks, and other types of Neural Networks. All of these focus on recognition performance leading to complex learning algorithms and non-linear neurons. In several of these works, the Neural Networks act as classifiers. Separate feature extraction algorithms extract relevant features that are fed to the Neural Network classifiers. The complexity of learning algorithms and feature extraction algorithms make the existing Neural Network-based face recognition methods inefficient for hardware mapping.

For the effective performance of feed forward neural network it is essential for the suitable selection of the parameters used for training. The initial weight will impact whether the net attains global or local minima of the error and if so how rapidly it intersects. To get the best result the initial weights are set to random numbers between -1 and 1. The reason for applying Neural Network is to accomplish a balance between memorization and generalization. The weight appearances are based on training models. Since error for the validation falling off training continues. Each time the error commences to increase, the net is starting to remember the training models. The main benefit of this algorithm is that it can recognize the input image as a face image or non face image and then identity the given input image. Thus the feed forward neural network classifies the input face as recognized face.

2.4 Yale Face Database

The Yale face database used, it contains 165 grayscale images in GIF format of 15 individuals. There are 11 images per subject, one per different facial expression or configuration: center-light, w/glasses, happy, left-right, w/no glasses, normal, right-left, sad, sleepy, surprised, and wink.

Fig.3 Sample of Yale Face Database

3. Proposed System

1) The first step of the proposed system is preparation of data and training set.
2) All the images remodelled in to Eigenfaces
3) The calculation of the Eigenfaces for the images present in the data set and stored in the set
4) The calculation of covariance matrix, the eigenvectors and Eigen values are derived from the covariance matrix
5) Select the Principal components
6) Classification of image using Neural Network

3. Results

The Yale database is used for experimentation, it consists of 165 gray scale images and a sample database is shown in figure 3. The calculated Eigenfaces are shown in figure 4.

Table 1 Experimental Results

S. No	Techniques	Recognition Ratio (%)
1	PCA	85.45
2	PCA with Neural Network	98.18

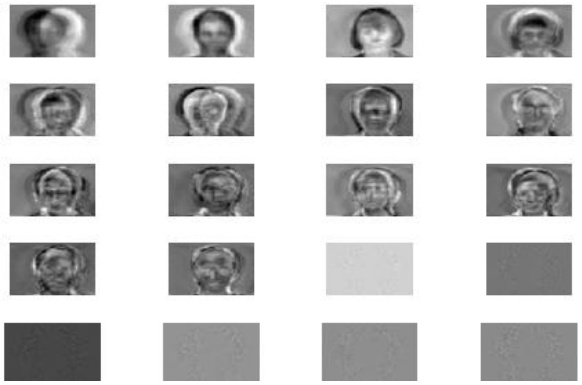

Fig. 4 Eigen Faces

The above Table 1 shows Principal Component Analysis with Neural Network is comparatively better as per Principal Component Analysis. The recognition ratio using Principal Component Analysis with neural Network is 98.18%

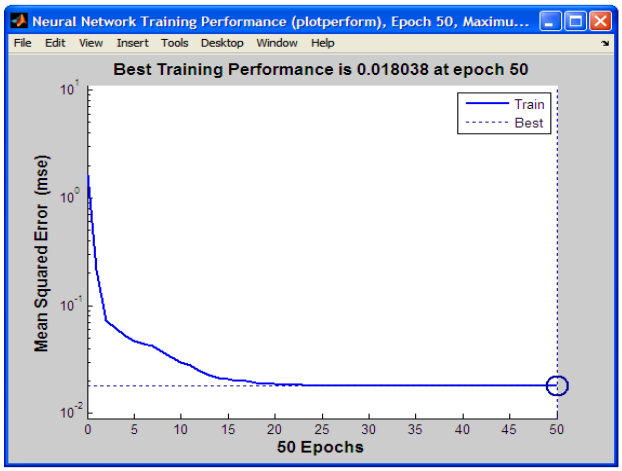

Fig. 5 Performance Graph for 50 Epoch

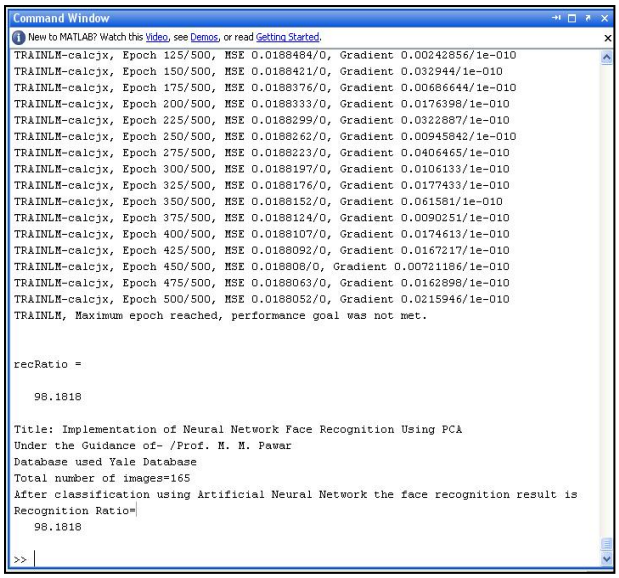

Fig. 6 Recognition Ratio using MATLAB

Table 2 Recognition Ratio by using PCA with NN

S. No	Iterations	Recognition Ratio (%)
1	25	91.23
2	50	96.44
3	75	98.18
4	100	98.18

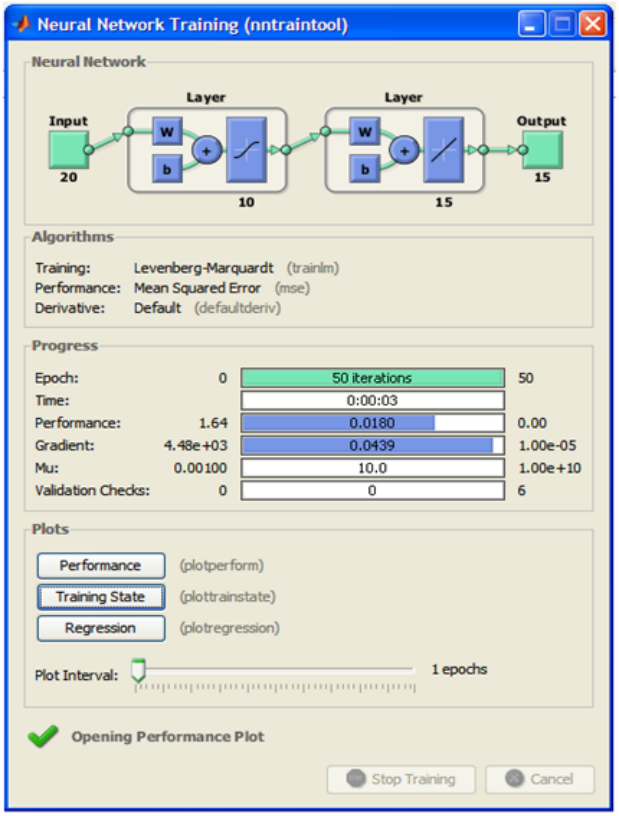

Fig. 7 Result-Training Tool Neural Network

Fig. 8 Recognized Image

Conclusions

The paper presents a face recognition approach using PCA with Neural Network techniques. The different face expression can be recognized using proposed system. The result is compared with PCA and proposed technique gives best recognition rate then the other. The recognition rate using Principal Component Analysis is 85.45% and the recognition rate with proposed system is 98.18%.

References

Kailash J. Karande, Sanjay N. Talbar Independent Component Analysis of Edge Information for Face Recognition, *International Journal of Image Processing* Volume(3), Issue(3), pp:120-131

Yuille A. L., Cohen D. S. and Hallian P. W (1989), Feature extraction from faces using deformable templates. *International Journal of Computer Vision*, 8:1, 99-111.

Kirby M. and Sirovich L., Application of the Karhunen-Loeve procedure for the characteristics of human faces, IEEE PAMI, Vol.12, pp. 103-108

Sirovich L. and Kirby M (1987)., Low-dimensional procedure for the characterization of human faces, *J. Opt. Soc. Am. A*, 4, 3, pp. 519-524

Turk M. and Pentland A. (1991), Eigenfaces for Recognition, *Journal of Cognitive Neuroscience*, Vol.3, pp. 71-86

Mayank Agrawal, Nikunj Jain, Manish Kumar and Himanshu Agrawal (2010), Face Recognition Using Eigenfaces & Artifiical Neural Network, *International Journal of Computer Theory and Engineering*, Vol. 2, No. 4.

Zhujie Y. L. Y. (1994), Face Recognition with Eigenfaces, Proc. IEEE International conference Industrial Technology, pp. 434-438

M. S. R. S. Prasad, S. S. Panda, G. Deepthi and V. Anisha, (2011), Face Recognition using PCA & Feed Forward Neural Networks, *IJCST*, Volume 2, Issue 8.

Arjun V Mane, M. M. Kazi, Ramesh R Manza, Karbhari V Kale (2010), Human Face Recognition Using Superior Principal Component Analysis (APCA), *International Journal of Computer Theory and Engineering*, Vol. 2, No. 5

S. Lawrence, C. L. Giles, A. C. Tsoi, and A. D. Back, (1997), Face Recognition: A convolutional Neural-Network Approach *IEEE Trans. Neural Network*, Vol. 8, No. 1, pp. 98-111.

M. J. Er., S. Wu, J. Lu, and H. L. Toh (2002), Face Recognition with Radial Basis Function (RBF) Neural Networks, *IEEE Trans. Neural Network*, Vol. 13, No. 3, pp.-697-710

N. Sudha, A. R. Mohan, Pramod K. Mehar (2011), A Self-Configurable Systolic Architecture for Face Recognition System Based on Principal Component Neural Network, IEEE *transactions on circuit & Systems for Video Technology*, Vol. 21, No. 8.