International Journal of Current Engineering and Technology
E-ISSN 2277 – 4106, P-ISSN 2347 - 5161

Available at http://inpressco.com/category/ijcet

Research Article

The State of the Art in Research into the Condition Monitoring of Industrial Machinery

Alaa Abdulhady Jaber[Â*] and Robert Bicker[Â]

[Â]School of Mechanical and System Engineering, Newcastle University, United Kingdom

Accepted 30 May 2014, Available online 01 June 2014, **Vol.4, No.3 (June 2014)**

Abstract

Machinery is adopted for a variety of functions, ranging from simple fans to complex ships. One of the fundamental challenges currently faced in a wide range of industries is how to identify faults in machinery before reached a critical level, so as to avoid system degradation, malfunction, and catastrophic failure. The condition monitoring of machines has long been accepted as a most effective solution in avoiding sudden shutdown and for detecting and preventing failures in complex systems. This paper describes the basic concepts of condition monitoring, and introduces the necessary background information about the various condition monitoring technologies used for different types of machines. Also, it discusses the potential benefits through utilizing the artificial intelligence techniques, such as artificial neural networks (ANN), fuzzy logic system (FLS), genetic algorithm (GA), and support vector machine (SVM), in developing robust condition monitoring systems to address issues of fault detection and diagnosis. Finally, rapid developments in electronics technology have opened new aspect in building monitoring systems using embedded devices. Therefore, in the last section of this paper the principles of embedded systems and their application in condition monitoring are further elaborated.

Keywords: *Condition Monitoring, Fault Detection, Rotating Machines, Industrial Robot, Artificial Intelligence.*

1. Introduction

Condition monitoring was first developed for the American nuclear industry in the 1960s.It is termed on-line condition monitoring when it ran concurrently during the normal operation of the system. If however, the system needs to be run in a particular manner, it is called off-line condition monitoring.

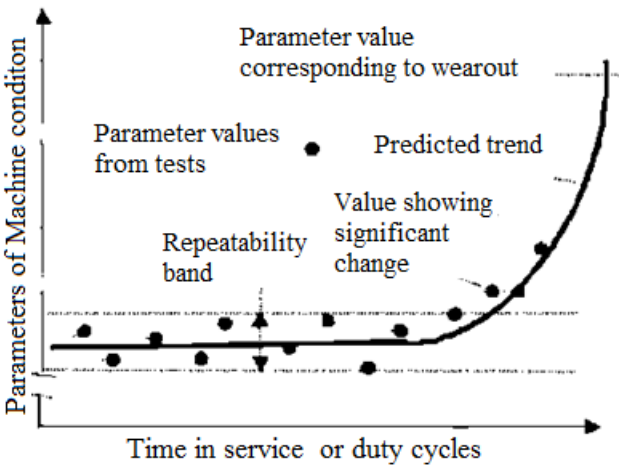

Fig.1 The principle of condition monitoring (Zurada, 1992)

On- or off-line condition monitoring can be defined as a type of maintenance inspection where an operational asset is monitored and the data obtained is then analyzed to detect signs of degradation, to diagnose the causes of faults, and also to predict for how long it can be safely or economically run (Zurada, 1992). The basis of condition monitoring is illustrated in Fig. 1.

The philosophy in the above Fig is suitable parameters need to be chosen which can be used as metrics to provide good and reliable indicators of the internal condition of the system and its key components. Periodic measurements are taken at appropriate time intervals to establish whether or not these parameters remain within the repeatability band. The values of parameters will tend to lie outside the repeatability band as system performance becomes degrade, eventually leading to a fault occurring, and thus the state of the system can be established. However, various monitoring techniques can be used to establish the status of a machine, including vibration, acoustic emission, wear particles, and thermal monitoring. One or more of these methods can be applied depending on the machine criticality and importance. Condition monitoring is very important for electrical and mechanical machinery and equipment, and can provide many advantages such as: improved safety and avoidance of unexpected catastrophic breakdowns; enhanced reliability; reduced maintenance costs; increased operational machine

*Corresponding author: **Alaa Abdulhady Jaber**

life; improved product quality, and increased machine productivity. This paper presents an overview to cover an inclusive literature on this subject of science by describing the previous and current research situation. In the next sections, different monitoring techniques applied with various machine types, such as wind turbines, internal combustion engines, cutting tools, and industrial robots, are discussed. Then, the features and functions of different artificial intelligence methods utilized in condition monitoring are demonstrated. At the last part of the paper, using embedded systems for condition monitoring is considered.

2. Condition monitoring of rotating machines

Rotating machines are commonly used in many applications, such as jet engines, turbines, and electrical motors. Failure in rotating parts often attributed to be one of the serious causes of breakdown in machines which operate at high or low rotational speeds, and this section reviews the application of condition monitoring techniques to rotating machinery.

Nacelle oscillation spectral analysis has been used for wind turbine monitoring to detect faults such as mass imbalance and aerodynamic asymmetry in turbine blades (Caselitz and Giebhardt, 2005). Fault prediction algorithms were developed to detect these faults by measuring vibration signals. Special acceleration sensors, which have a frequency range start between 0-500Hz, were fixed in three suitable locations to gain accurate measurements. From experimental results and field the developed algorithms proved effective in fault detection. Meanwhile, an offline fault diagnosis method for use with industrial gas turbines has been designed using multiple Bayesian models (Lee *et al.*, 2010). In this study different fault situations were considered, such as single faults in one component, simultaneous faults in more than one component, and sensor biases. The posterior probability was used to average the results from multiple Bayesian models. This method was applied in the diagnosis of a single shaft gas turbine with a faulty compressor. It was found that only a limited amount of data could be used in this approach to detect and identify faults in the compressor and the fuel flow sensor. Another paper implemented the artificial neural network for optimal condition monitoring of wind turbine components (Tian *et al.*, 2011). The objective of this study is to minimize the operation and maintenance costs of electrical generation system. Two failure probability thresholds were used in the proposed maintenance strategy to estimate costs. A simulation study was then conducted to test the performance of this method in reducing maintenance costs.

Gears have wide industrial application and unforeseen failures can be enormously damaging, and so research into condition monitoring and fault diagnosis for gearbox is very important. An online gearbox monitoring system based on the LabView program was developed by Wei *et al.* (2011).The technique relies on measuring the noise level emitted from the gearbox using NI hardware. This system has the capabilities to analyze data online and offline, and to query historical data. The authors concluded that the noise detection system can effectively reflect the gearbox's operation status, fault type and fault location by using spectral analysis. They added that this technique has more advantages than vibration measurement. Another technique for monitoring of gearbox has been proposed by Onsy *et al.* (2012) . They have applied an image registration (IR) technique for online health monitoring of gears system. The main aim of this study was monitoring the progression of micro-pitting and surface scuffing failures. A back-to-back gearbox was designed, and a variable speed electric motor used to drive the system. To evaluate the state of health of this system, the failure index (FI) was found by comparing captured images at different time intervals with reference images taken before running the test. Fig. 2 shows the values of failure index for pinion and wheel gears versus number of cycles and it can be concluded that the micro-pitting progressed gradually during testing. To check the capability of this technique, the FI results computed using the IR technique were correlated with vibration and oil debris analysis indicators measured for the same test rig and the findings were promising.

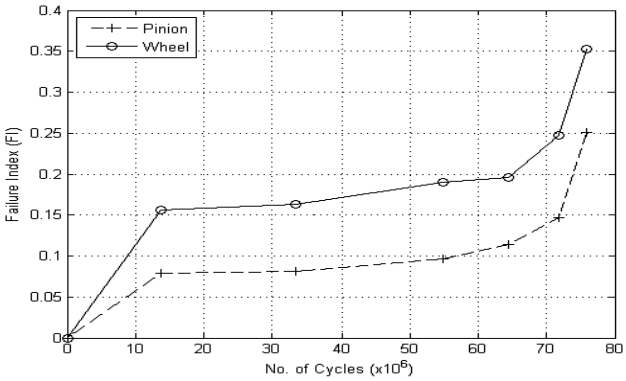

Fig.2 Failure index (FI) values of geared system (Onsy *et al.*, 2012)

Bearings are of paramount important in almost all forms of machinery, and bearing failure is one of the foremost causes of breakdown in rotating machines. Several non-destructive and contactless condition monitoring methods have been developed for monitoring their health.

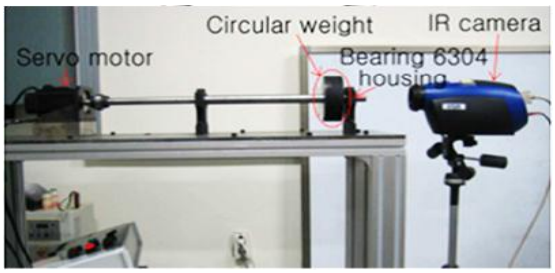

Fig.3 Thermo-graphic test rig for bearing monitoring (Seo *et al.*, 2011)

A research group applied an infrared thermo-graphic technique to monitor deep-grooved ball bearing with

circular weights mounted on them and different lubrication states (Seo *et al.*, 2011).

They compared the results from this method with those of the traditional vibration spectrum analysis to evaluate the efficiency of the suggested method. Fig. 3 shows the test rig, and the infrared camera used in the experiment was the Silver 450 M from Cedip Corp.

The vibration analyzer device shown in Fig. 4 was used for spectrum analysis, and the data acquired using this technique was reported to be clearer than that derived using vibration analysis technique.

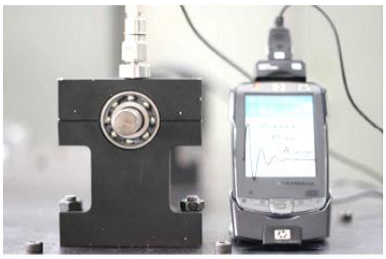

Fig.4 Vibration analyzer (Seo *et al.*, 2011)

Ultrasound can be defined as "sound waves that have frequency levels above 20 kHz; higher than what the unaided human ear can normally hear" (Kim *et al.*, 2008). All machines under normal operating conditions emit special patterns of sound, and these patterns change if abnormalities occur inside the machine. An experimental study was conducted to compare the effectiveness of an ultrasound vibration measurement technique for the condition monitoring of low-speed bearings (Kim *et al.*, 2008). To precisely identify the presence and severity of defects from measured signals, the researchers developed a type of signal processing analysis called the peak ratio (*PR*), which was suggested by Shiroishi as shown in equation (1) (Shiroishi *et al.*, 1997):

$$PR = \frac{N\sum_{j=1}^{n} P_j}{\sum_{k=1}^{N} S_k} \qquad (1)$$

Where, P_j is the amplitude value of the peak located at the defect frequency, S_k is the amplitude at any frequency, N is the number of points in the spectrum, and n is the number of harmonics in the spectrum. The modified *PR* is shown in the following equation, and it depends on disparities between the peak defect frequencies and the average value over the whole spectrum:

$$mPR_O = 20\log_{10}\frac{\sum_{j=1}^{n}(P_j - A_s)}{A_s} \quad (dB) \qquad (2)$$

$$mPR_I = 20\log_{10}\frac{\sum_{j=1}^{n}(P_j - A_s) + \sum_{i=1}^{l}(P_{Si} - A_s)}{A_s} \quad (dB) \qquad (3)$$

$$A_s = \frac{\sum_{k=a}^{b} S_k}{(b-a)} \qquad (4)$$

Where, A_s is the average spectrum amplitude in the frequency band from *a* to *b*. It was observed that the ultrasound technique was more effective than common vibration measurements for fault detection. Recently, this opinion has been supported by another research group (Wei *et al.*, 2011). In contrast, Randall (2004) used the vibration signature of bearing faults to separate gear signals from bearing signals in a helicopter gearbox. This technique was based on the different statistical properties of bearings and gears, which were the main factors in the fault diagnosis approach. An illustration was conducted using case history data collected from the US, and Australian Navies. A time-frequency analysis technique was adopted for real-time bearing fault diagnosis and prognosis (Aliustaoglu *et al.*, 2008). For frequency analysis, the Fast Fourier Transform (FFT) method was used, and experimental work carried out on the bearing-shaft mechanism of an AC electric motor. A schematic diagram of the experimental setup is shown in Fig. 5. A current sensor was fixed to the phase line of the motor in order to measure the electric current passing through the driver of the motor, while two accelerometers were placed on the housing of the bearing to measure vibration. To analyze bearing status and the progress of any existing faults, vibration and current data were gathered and digitized using a National Instruments data acquisition card. A technique of envelope analysis was applied to separate the modulation signal from the carrier frequency. The authors developed computer software to perform signal processing task, and six types of defects were defined in this software. The authors claimed that this technique is better than most other advanced techniques, and it could be easily adopted for real-time bearing fault diagnosis.

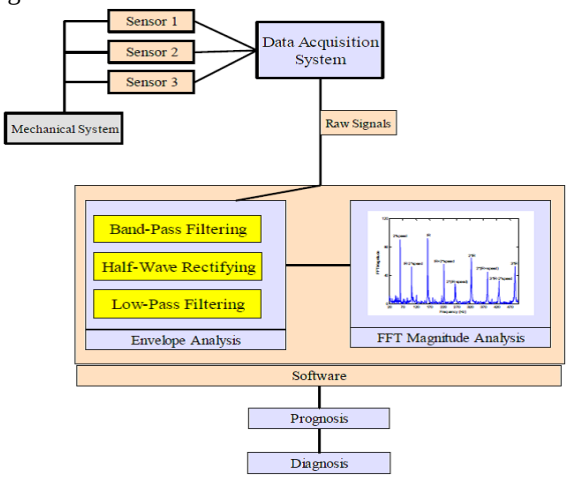

Fig.5 Bearing fault diagnosis and prognosis system (Aliustaoglu *et al.*, 2008)

The method of continuous time parameter estimation in a mathematical model has been used to present a framework for failure detection and diagnosis for DC motors (Dobra *et al.*, 2011). Error prediction method was adopted for the direct estimation of parameters. Using this procedure it was possible to estimate the model parameters in the presence of faults, but drawbacks included its complexity and high computational requirements. Moreover, in another study, a condition monitoring technique based on statistical and numerical tools was suggested for the

detection of the beginning of faults in induction motors (García-Escudero *et al.*, 2011). The FFT was used to find the spectrum of the motor current, and a multi-resolution technique using wavelet function was implemented on this spectrum in order to detect the significant peaks. The researchers carried out an experimental study to prove the effectiveness of this approach, concluding that it is very reliable and convenient in detecting failures at their early stages, and it can also take into account the presence of serious anomalous feature measurements.

Wheels represent the most important parts in wheeled mobile robots. Mobile robots are required to conform to stringent qualifications for completing many dangerous tasks such as rescue missions in the wake of natural disasters and planetary exploration. The necessary high degree of self-reliance can be achieved if advanced operational health monitoring systems are fitted to these robots. A model-free approach has been suggested to solve the problem of fault detection in wheeled mobile robots (Skoundrianos and Tzafestas, 2004). The block diagram of this technique is shown in Fig. 6, and it mainly depends on the right velocity (V_R) and left velocity (V_L) of the wheels. For plant modeling, local model networks (*LMN*) were used. In addition, change-detection algorithms were implemented for the reliable generation of residuals. The experimental work was conducted using a Robuter robot, and faults in the wheels of this robot were identified. This approach was compared with analytical model-based techniques, and with the structures of other model-free techniques. It was found that this approach has a wider applicability since it can overcome the uncertainty problem and provides a direct reference to the operating system.

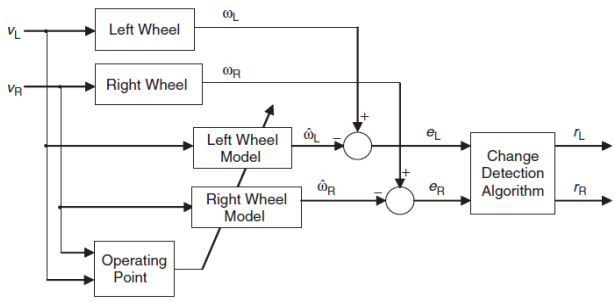

Fig.6 Mobile robot wheels fault diagnosis scheme (Skoundrianos and Tzafestas, 2004)

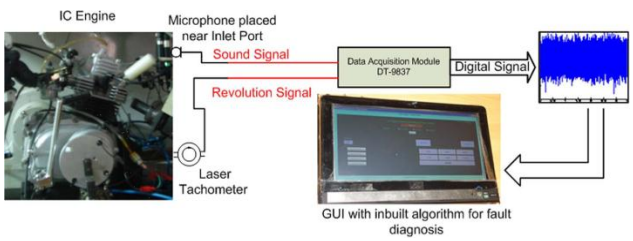

Fig.7 Audio signature analysis equipment (Yadav *et al.*, 2011)

A study conducted by Yadav *et al.* (2011) applies an audio signature for condition monitoring and the classification of faults in the internal combustion engine. The Fourier transform and correlation methods are used to identify whether the engine is healthy or faulty. This proposed method was tested online using a 1.6 GHz processor and 2-GB memory, as shown in Fig. 7, and the test could be carried out by an expert technician in 60 to 120s.

The authors mentioned that "most literature dealing with fault diagnosis of IC engine has applied their methods under laboratory environments and proposed that their algorithms can be used for online fault diagnosis under actual industrial environment. In the present research, the proposed technique carried out online fault diagnosis of IC engine under actual industrial environment with desirable accuracy and specified time limits". In one recent study, a technique based on measuring changes in the natural frequencies of a rotor shaft was proposed to locate and estimate the severity of a crack (Ong *et al.*, 2012). Data from experimental modal analysis (EMA) were used, and a crack detection algorithm was developed which depends on the first and second natural frequencies. An experimental test was designed using the Nevada RK4 Rotor Kit, as shown in Fig. 8, and rotor shafts with different sizes and locations were prepared. In addition, by connecting changes in natural frequencies to fractional changes in modal energy, a crack-locating model was performed. Cracks were accurately identified using this method, with only a small localization error. Another application of modal analysis has been used to diagnose faults in induction motors. Ma *et al.* (2007) successfully used experimental modal analysis for the detection of rotor fault in an induction motor. Faults were detected by monitoring the difference between the motor's vibration modes under normal and faulty conditions and with different load situations.

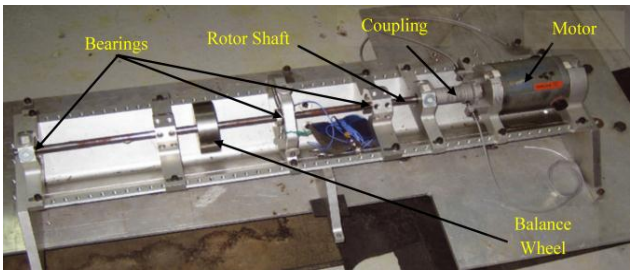

Fig.8 Using Nevada RK4 Rotor Kit (Ong *et al.*, 2012)

3. Condition monitoring of cutting tools

Cutting tools are considered to represent the highest costs in the production processes in manufacturing industry, along with raw materials. Many techniques have been developed for online tool condition monitoring as this can help to prevent damage to machine tools and work pieces. Acoustic emission (*AE*) signals are low amplitude, high frequency stress waves generated in a solid medium due to the rapid release of strain energy (Li *et al.*, 2007). A method based on the analysis of *AE* was used for the on-line condition monitoring of tool wear in a milling machine (Osuri *et al.*, 1991). The researchers developed a mathematical model to calculate the root mean square

(RMS) value of the acoustic emission signal. This model depended on machine variables, and experiments were conducted on a Bridgeport milling machine to investigate its accuracy. Fig. 9 shows a schematic arrangement of the experimental set-up.

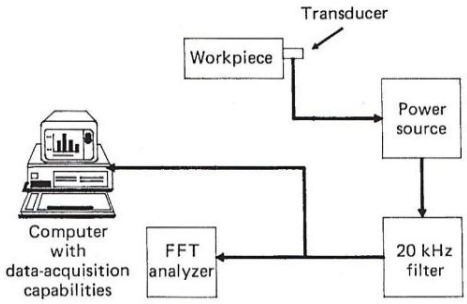

Fig.9 Schematic diagram of experimental set-up (Osuri *et al.*, 1991)

An on-line computer data acquisition system was used to collect and analyze data, and a PCB 392A transducer utilized for *AE* signal measurement, and the experimental and theoretical results showed very good agreement. A similar study recent used acoustic emissions for online tool wear monitoring in a milling machine (O.A.Olufayo *et al.*, 2011). But here a sensor fusion approach was implemented to extract and determine the most necessary parameters in order to generate a very accurate time schedule for changing the tool, and the researchers did not use a mathematical model of the acoustic emission signal. It was found that this method can present a lot of information during the cutting process regarding the failure progress of the tool. In another study, an on-line approach based on measuring cutting force and torque signals in a drilling machine was proposed to monitor tool wear status during the metal drilling process (Ertunc and Oysu, 2004). The experimental work was completed using a computer numerical controlled (CNC) five axis machining center, which has the ability to move along three perpendicular axes. The researcher positioned a dynamometer between the work piece and fixed plate (Fig. 10) to measure the thrust force (F_z) and torque (T).

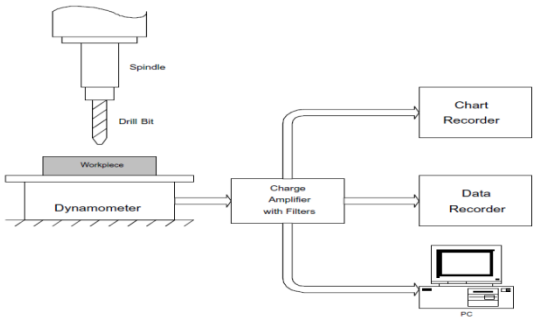

Fig.10 Force and torque measurement (Ertunc and Oysu, 2004)

After the signals were collected, a hidden Markov model (HMM), phase plane method, and transient time method were applied to analyze the signals and extract features that related to cutting force and torque. A torque mathematical model developed by another research group was also used, to predict the force signals along the cutting lips. It was concluded that this method was very reliable, and that since the HMM does not require mechanical or mathematical models of the machine, the transient time method offers the benefit of the early prediction of wear, and the phase plane method delivers satisfactory criteria for wear monitoring. Li *et al.* (2007) reported the development of an intelligent prediction monitoring system using multiple regression models to estimate the cutter's remaining useful lifetime in high-speed machining (HSM). Vibration force and acoustic emission sensors were used in the experimental tests to collect signals from the cutting tool. Furthermore, a wavelet decomposition technique was applied to extract the important information from sensor signals. Experimental work was conducted using a milling machine, and the results showed satisfactory predictions of tool life.

4. Applications of condition monitoring techniques in industrial robots

Industrial robots are commonplace in production systems and are used in order to improve productivity, quality and safety in manufacturing. Many functions can be carried out by industrial robots and they now represent the basic building blocks of the production sector. Recent developments involve using robots in cooperation with production line operatives, and they are now routinely used in healthcare settings, nuclear plants, and other hazardous environments. Regardless of application, there are significant implications for operator safety in the event of a robot malfunction or failure, and the resulting downtime has a significant impact on productivity in manufacturing. The ability to continuously monitor the status and condition of robots has become an important research issue in recent years and is now receiving considerable attention from researchers. For instance, a study conducted experimental modal analysis on the PUMA 560 robot (Elosegui, 1994), with the main aim to find the natural frequencies of the robot and use them as fault indicators. Pan *et al.* (1998) used vibration signals during normal operation to diagnose joint-backlash on a PUMA 762 industrial robot. Time domain and frequency domain analyses were employed to identify features such as probability and density. Artificial neural networks were then used for pattern recognition. The experimental work was performed as shown in Fig. 11. One accelerometer was fixed on the robot end effector to measure vibration responses. Additionally, different levels of backlash were artificially contrived in joints 4 and 6 to validate this method. It was pointed out that the technique could be applied in real working environments, and moreover it was inexpensive as only one sensor was used to detect faults.

Similarly, a technique using only one accelerometer mounted at the robot tip has been applied for the online fault diagnosis in the 4 Degree of Freedom (DOF) SCARA robot (Liu *et al.*, 2009). The tip acceleration calculated theoretically using a dynamic model of the robot, and was used as a reference. By comparing the

experimental tip acceleration with the reference, the condition of the robot could be identified. In contrast, another study used more than one sensor for robot joint condition monitoring (Trendafilova and Van Brussel, 2003). The objectives were to extract the vital features directly from the measured acceleration signals, and to try to specify defects by finding properties dependent on fault size. Signals were analyzed from the robot joints without error, and subsequently from joints having backlash or clearance using nonlinear dynamics and statistical tools. The proposed system was validated using three robot types as shown in Fig. 12, and from different joints. In order to simulate robot damage conditions, three levels of backlash (small, medium, and large) and clearance were generated in the joints by implementing a variety of loads and adjusting the backlash screws. The authors used the pattern recognition principle with nonlinear autoregressive (NAR) analysis for the detection of defect from the data, and acceptable performance was demonstrated. The same technique applied for fault quantification was less effective, however. On the other hand, the use of such statistical methods and other nonlinear dynamic techniques such as the Lyapunov exponent demonstrated better performance in the fault detection procedure since they use features that are sensitive to the size of defects.

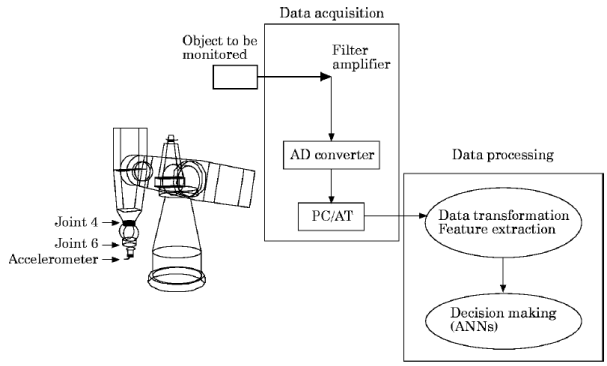

Fig.11 Schematic diagram of the experimental set-up (Pan *et al.*, 1998)

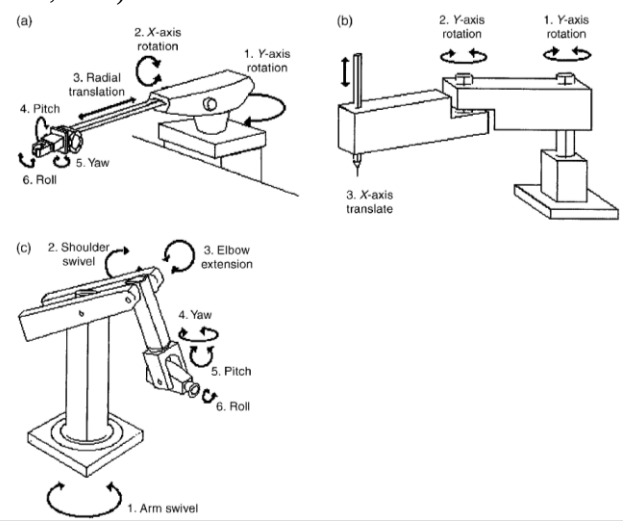

Fig.12 Robot arms. (a) Spherical robot arm, (b) SCARA robot arm, (c) Revolute robot arm (Trendafilova and Van Brussel, 2003)

However, another research group also used a nonlinear model to address problems of fault detection and isolation in complex systems, such as in a robot's manipulator (Filaretov *et al.*, 1999). Algebraic functions were implemented to design the nonlinear diagnostic observer. This observer was able to dispense with the linearization in nonlinear models of robots and to avoid model errors. The robot modeling was conducted using MATLAB in discrete time. It was shown that, despite the fact that the use of this model dispenses with linearization, it does not allow some faults to be isolated. In another study of fault diagnosis in rigid link manipulators (Vemuri *et al.*, 1998), an on-line learning architecture with a neural network was used for fault detection and isolation by monitoring the behavior of the system. A two-link robotic system was used to show the capability of the neural network in fault diagnosis. Their results showed that the learning methodology which they used can provide a model of a fault via analysis of input/output properties as well as detecting the occurrence of the fault. Furthermore, artificial neural networks (ANNs) were used for residual generation and analyzing them in robotic manipulators (Terra and Tinós, 2001). For residual analysis, three types of ANN architectures were employed. The first is the radial basis function network (RBFN), which uses position and velocity residuals to identify faults. The second architecture is also a RBFN, but it uses only the velocity residual, and the third is a multilayer perceptron (MLP). A comprehensive simulation study of the PUMA 560 yielded results collected from three joints. It was concluded that the post-failure control of the mechanical manipulator in a hybrid system framework could be included in this work.

Case-based reasoning and signal processing were adopted to build an approach to fault diagnosis in industrial equipment (Olsson *et al.*, 2004). Wavelet analysis is applied to remove noise from sensor signals and to extract the most relevant features. Then the extracted feature is sent to the classification component, which uses case-based reasoning to identify the class of faults according to the characteristic of the previous fault cases. Experimental work on an industrial robot was used to assess the performance of this approach, and Fig. 13 shows a schematic diagram of the set-up.

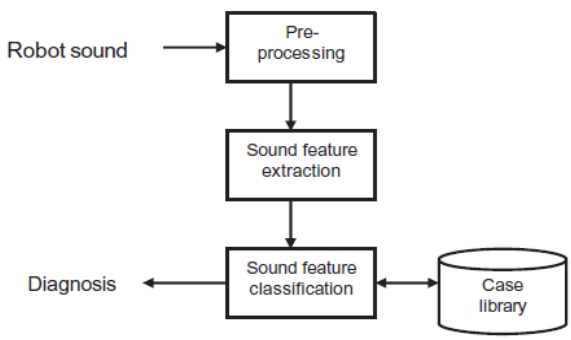

Fig.13 Fault diagnosis steps (Olsson *et al.*, 2004)

A microphone device was used to gather sound signals from the robot. Then, unwanted noise was filtered out in a pre-processing step. After that, the important sound

features were extracted, and their classification was performed based on previously classified sound descriptions in the case library. The authors reported that "this system is able to successfully diagnose faults in an industrial robot based on a low number of previous examples".

Halme (2006) studied the condition monitoring of servomotors and gears in an industrial robot using performance criteria monitoring, which is a model-free method. This study was implemented with a 6-dof robot type Fanue R-J2 M-6i utilized for material handling. This robot has a weighs 290kg, and is capable of moving 6kg with a repeatability of ±0.1 in space. Acceleration, acoustic emission, and sound sensors were used in order to monitor the accuracy of the robot's path. By comparing different vibration signatures with signals measured over time, deviations in the performance of the robot could be found. But this method cannot represent an eclectic technique since it always needs to compare signals with references measured at different times and from the same production process. In contrast, another study introduced model-based fault diagnosis to detect actuator faults in a robot manipulator (Capisani *et al.*, 2010). Analytical redundancy was achived using higher order sliding mode Unknown Input Observers (UIO). In addition, the design of the input laws of the observers was based on the super-twisting second order sliding mode control (SOSMC) approach. Simulation and experimental work was conducted on a real COMAU SMART3-S2 with three links and three joints as illustrated in Fig. 14. The results were compared with those of previously proposed approach which depends on sub-optimal second order sliding mode control (SOSMC). It was concluded that the super-twisting approach did not always provide good performance in terms of avoiding false alarms.

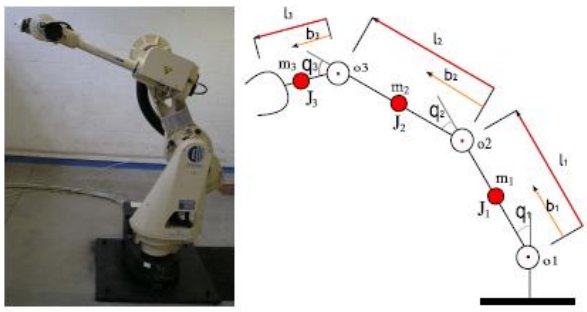

Fig.14 The SMART3-S2 robot (Capisani *et al.*, 2010)

A study by Caccavale *et al.* (2009) presented an approach based on support vector machines to detect and isolate fault in a robot's actuators. They used an already available dynamic model of the manipulator, and trained SVMs off-line to compensate for unknown dynamics, uncertainties and disturbances. Furthermore, a radial basis function network was implemented to interpolate unknown actuator faults. Finally, an investigation was performed experimentally using an industrial robot to check the effectiveness of the approach. Another research study used wavelet multi-resolution analysis (WMRA) coupled with a neural network-based approach in order to diagnosis faults in an industrial robot manipulator (Datta *et al.*, 2007). A Matlab-Simulink environment was used to monitor the neural network classifier with a robot used in semi-conductor fabrication. It was concluded that the WMRA is excellent for data reduction and capturing the important properties of signals. However, it did not show good performance in distinguishing among some of the signals. Meanwhile, two neural networks have been used to propose an algorithm for the online monitoring of two-link manipulators (Van *et al.*, 2011). This approach focuses on identifying changes in robot dynamics due to faults. It was noted that this technique was able to provide estimates of fault characteristics.

In another paper, model-based fault detection (FD) and an isolation scheme for rigid manipulators was designed which depends on a suboptimal second-order sliding-mode (SOSM) algorithm (Brambilla *et al.*, 2008). In order to make the procedure of FD possible, an input signal estimator and output observers were adopted and SOSM was used to design the input laws of the observers. Experimental work and theoretical simulations were accomplished with a COMAU SMART3-S2 robot manipulator, and the results showed that the scheme has a good ability to detect and identify faults. On the other hand, the proposed scheme was not able to deal with multiple faults in more than one actuator or sensor, and is also neglected elastic effects. Another technique proposed for fault detection and isolation in robot manipulators (Mohseni and Namvar, 2009) was based on a new simplified Euler-Lagrange (EL) equation able to reduce the complexity of the approach. The use of this equation allowed the uncertainty in the manipulator's gravity to be handled. Moreover, the effects of noise and an uncalibrated joint torque sensor could be taken into account. Simulation was conducted using Matlab-Simulink environment to illustrate the performance of this method.

According to Márton (2011) has introduced a new method based on the on-line monitoring of the lubricant in robot actuators. The approach used depends on joint position and velocity and ambient temperature in order to generate a residual signal. Moreover, an observer was designed using a dynamic model of the robot whose main function is to estimate the viscous term. The findings showed that the viscous friction coefficient can be estimated precisely by the proposed observer. However, because of the wear process in the robot's joints, the friction level will increase. So a study was conducted to consider the problem of wear estimation in standard industrial robot joints (Bittencourt *et al.*, 2011).A static friction model was used to find the wear level and then this model was extended to take account of the effects of wear. The resulting model can illustrate the relationship between friction in the joints and changes in speed, load, temperature and wear. As a result of the experimental and theoretical work, a wear estimator was proposed which was able to distinguish between wear effects under large temperature variations.

Another serious problem in industrial robot is the large backlash levels in their joints. Recent work has been conducted to detect backlash in the PUMA 560 robot

(Jaber and Bicker, 2014). A fault detection system using wavelet analysis was successfully designed based on National Instrument (NI) software and hardware. The wavelet transform, which has been shown to be an efficient time-frequency analysis method, was adopted to remove noise from the captured vibration signals and then to extract features from them. Using wavelet analysis, noise from the signals could be removed, and the original signal restored, and therefore the signal-to-noise ratio is improved. Therefore, the extracted features showed high sensitivity to changes in joint backlash.

5. Artificial intelligence techniques for condition monitoring

Artificial intelligence (AI) can be defined as a "computerized approach that employs knowledge, reasoning and/or self-learning to enable machines to perform tasks which humans perform using their intelligence" (Heng, 2009). In recent years, artificial intelligence techniques such as neural networks, fuzzy logic and support vector machines have been widely used to improve the accuracy and efficiency of fault detection and the diagnosis of machines which can take over some menial and tedious tasks. The intelligent detection and diagnosis begins after data has been collected and important features extracted, as illustrated in Fig. 15. The following sections summarize the fundamental concepts of these methods and their applications to the area of intelligent condition monitoring.

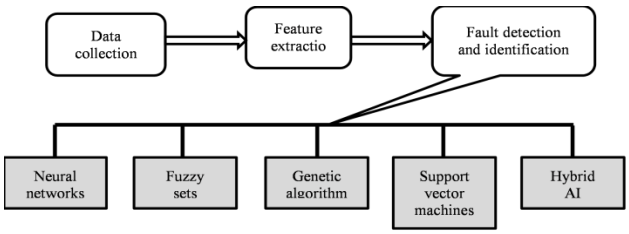

Fig.15 Some artificial intelligence techniques used for condition monitoring

5.1 Artificial Neural Network (ANN)

An artificial neural network (ANN) is a computational structure inspired by the data processing and learning ability of biological neurons in the brain. It is composed of simple computation units called neurons, which integrate the functionality of both memory and computation (Samarasinghe, 2007). ANNs can be employed for a variety of tasks, such as function approximation, classification, pattern recognition, clustering, and forecasting (Samarasinghe, 2007). For example, an ANN was applied to fault detection and diagnosis in 4-stroke internal combustion engine by depending on minimum number of sensory data (Chandroth *et al.*, 1999). Cylinder pressure and vibration data were acquired from the engine. By using features of the collected data, two sets of artificial neural nets were trained separately. Experimental work was carried out using a twin cylinder diesel engine, and It was demonstrated that it is possible to detect and diagnose the most common component faults in the engine using either cylinder pressure or vibration amplitude. Such a system would thus require fewer sensors. Neural networks are commonly arranged in layers, and each layer has an array of interconnected elements. Each element receives an input signal, manipulates it, and then output signals are forwarded to the other connected elements in other layers. There are many different forms of neural networks depending on their connection patterns as shown in Fig. 19 (Zurada, 1992), but according to Dreyfus (2005) there are two main classes:

1- Feed-forward neural networks, whose signal direction from input to output units without any feedback connection. This means that past signals are not used in the processing of new signals.

2- Recurrent (Feedback) neural networks, which have feedback connections, and past signals are used to identify new features.

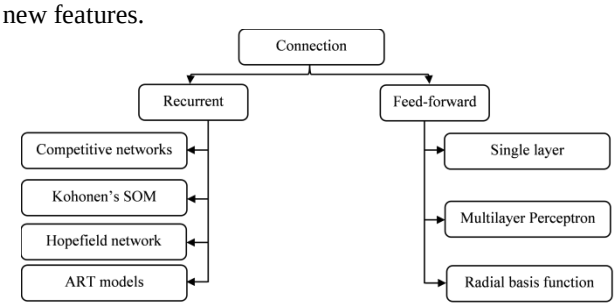

Fig.19 Types of neural networks (Zurada, 1992)

There has been significant recent interest in applying artificial neural networks to identify and diagnose faults in machinery. Kudva *et al.* (1992) used multilayer perceptron neural networks to deduce the size and location of damage in smart structures using measured strain values at different locations. In contrast, Parhi and Dash (2011) applied the same technique for structural monitoring, but vibration signatures were used instead. Both studies achieved acceptable levels of prediction of crack locations. Lopes Jr *et al.* (2000) implemented impedance techniques and neural networks to detect, locate, and characterize structural damage. The advantages of smart materials technology and the characteristics of neural network were combined in proposing a self-diagnostic procedure. Experimental investigations were successfully carried out to locate and identify damage in a quarter-scale bridge section. It was concluded that this technique can be applied to complex structures. In another study, a 2-step neural network was used to design a predictive fault detection and diagnosis model for the monitoring of nuclear power plants (Bae *et al.*, 2006). The main role of the first network was to classify failure type, and then failure severity was determined using the second network. The results showed that this model was suitable for failure detection, but additional methods were needed to increase its accuracy. Another study conducted by Zhang *et al.* (2007) looked at fault diagnosis in steam turbine generator by applying of an integrated neural network based on information combination. The aim of this method was to overcome the problem of multi-failure mode diagnosis in single neural

sub-network, which normally requires a lot of learning samples. The preliminary diagnosis of faults was implemented using one sub-neural network, and after that the sub-neural networks were merged to give the final decision. It was found that there are many advantages to this system, including that system accuracy and reliability are increased, and the uncertainty of system information is reduced.

5.2 Fuzzy Logic

Fuzzy logic or fuzzy set theory is an important technology first introduced by Zadeh in the 1960s to deal with vague, imprecise and uncertain knowledge and data. It is especially suitable for systems with a mathematical model which is difficult to drive. Fuzzy logic is composed of four items (Ma *et al.*, 2007):

- A fuzzy set, which is applied to achieve a flexible representation of the elements in the fuzzy system.
- A membership function, which shows the level of possibility that an object is an element of a certain class.
- Logical operators, which are used to find new fuzzy sets from the existing fuzzy sets.
- Fuzzy rules, which show the conditional articulations used to perform the input–output relationships of the system, which can include human descriptive judgments such as:

IF speed is high THEN stopping-distance is long
IF speed is low THEN stopping-distance is short

Decisions in fuzzy logic can be made with estimated values and incomplete information. A decision might be changed at another time when extra information is available, or when it may not be correct. For instance, if the input parameter values of a system might be fuzzy or incomplete, the conclusions drawn will be incomplete or incorrect as well (Munakata, 2008). The major advantages of fuzzy systems are their robustness and flexibility, since they are not restricted to a true or false approach, and they are ideal where system information is limited and unclear (Lim., 2009). The application of fuzzy systems in condition monitoring has recently been studied in building reliable monitoring systems. For example, Navarro *et al.* (2010) successfully designed fuzzy logic system for monitoring electric motor ball bearings. The researchers used more than one signal to accurately detect bearing failures. These signals were vibration, stator current, bearing frequency, and acoustic emission. In another paper, a computer system-based fuzzy tool was developed to monitor an induction motor by measuring its vibration signal (Janier and Fazrin Zaim Zaharia, 2011). The information received from the vibration sensors was used to determine whether or not faults had occurred and actions would then take place to protect the motor from damage.

Aliustaoglu *et al.* (2009) developed a fusion approach based on a two-stage fuzzy system and sensor readings for tool wear monitoring. The machine sound, thrust force, and vibration signals were used to drive the statistical parameters by applying the first stage of the proposed approach, which depends on a Mamdani fuzzy model as demonstrated in Fig. 20. The output values from the first stage were taken as the input parameters of the second stage, which applies the Takagi-Sugeno fuzzy model. Then, the final decision was made using the threshold function and depending on the output values from the second stage as illustrate in Fig. 21. The authors mentioned that the performance of this approach can be improved by using electric motor current as a fourth input parameter to the fuzzy system, in addition to using various classifiers.

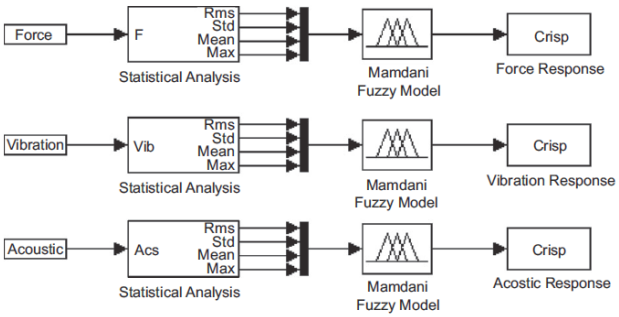

Fig.20 The first stage of proposed Fuzzy- sensor model (Aliustaoglu *et al.*, 2009)

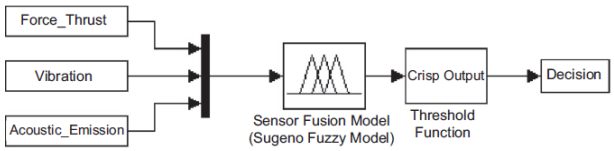

Fig.21 The second stage of proposed Fuzzy- sensor model (Aliustaoglu *et al.*, 2009)

5.3 Genetic Algorithm (GA)

The genetic algorithm has first introduced by John Holland in the early 1970. It can be defined as a computational technique that mimics the genetic processes of biological organisms in order to solve search and optimization problems (Negnevitsky, 2005, Munakata, 2008, Ma *et al.*, 2007). To apply a GA to any problem, several major steps have to be followed (Goldberg, 1989, Ma *et al.*, 2007). Firstly, a number of possible individual solutions containing a number of chromosomes are randomly generated. Then, the fitness value of each individual current solution has to be computed, the purpose of which is to evaluate the performance of each chromosome. Once the fitness values have been calculated, a new population will be generated by applying crossover and mutation operations to the individuals. When a convergence criterion is reached, the algorithm stops; and if not, this process is repeated from the second step.

Genetic algorithms have since been adopted in many different disciplines, such as for automatic programming, missing-data estimation, finite-element analysis, and condition monitoring (Ma *et al.*, 2007). For example, genetic algorithms were successfully applied in the ball bearing monitoring process to select the most important features from a large set of vibration signals (Jack and Nandi, 2000), where in one set of experiments the genetic algorithm was capable of selecting a subset of six inputs

from a set of 156 features. In a similar study, a GA-based optimization method was applied to select the optimal cutting conditions for each pass of a turning operation, with consideration given to the effect of overall progressive tool wear on machining performance (Pal *et al.*, 2011). The optimization process showed precisely that cutting parameters are not constant when tool wear is taken into account. From that, it can be concluded that the GA has very good classification accuracy. A two-stage process was utilized to detect structural damage (Chiang and Lai, 1999, Moslem and Nafaspour, 2002), where in the first stage the residual force method was applied to initially locate damage. The genetic algorithm was then used in the second stage to evaluate the damage in the identified structure.

Differences in the natural frequencies of force vibration are most frequently represented as a potential damage indicator (Ostachowicz *et al.*, 2002). However, changes in the first four frequencies have been used to identify the exact location and magnitude of an added concentrated mass on a simply supported, isotropic plate (Ostachowicz *et al.*, 2002). A genetic algorithm model was developed which showed good ability in finding the accurate location and value of added mass. Meruane and Heylen (2011) have presented a technique based on model properties and a genetic algorithm to detect faults in a tri-dimensional space-frame structure. Two damage scenarios were adapted in this work to verify this technique. The findings showed that this method was capable of detecting and quantifying three simultaneous instances of damages.

5.4 Support Vector Machines (SVM)

Support vector machines are a type of artificial intelligence methodology applied mostly for the classification and regression of data. SVMs were first introduced by Vapnik in the late 1990s and are supervised learning methods derived from statistical learning theory, as in most neural network systems. Supervised learning methods refer to machine learning methods which try to generate a clear map between the inputs and outputs in the training data. SVMs are suitable for two-class classification, but there are a number of extensions which enable this technique to be used for multi-class classification problems (Ma *et al.*, 2007, Lim., 2009).

SVMs have gained significant importance recently because of their superior ability to generate an accurate representation of the relationship between the input and output from a small amount of training information (Sharma, 2008). For example, if there is a two-class dataset, an SVM will classify them by finding a separating plane that will divide the space containing the data. All points at each side of the hyper-plane will belong to a specific class. The best separating plane can be a linear boundary in the input feature space. However, in some cases a non-linear boundary could be used to separate the target classes where a linear boundary might not be able to separate them adequately, as shown in Fig. 22 (Fulcher, 2006).

Nowadays, SVMs are applied in many research fields, such as biological sequence analysis, text classification, data mining, facial recognition and mechanical fault diagnosis, and the results are promising (Lim., 2009, Zhang *et al.*, 2009). In terms of fault detection, SVMs have been applied to detect the location of damage in rigid structures (Shimada and Mita, 2005, Shimada *et al.*, 2006). Changes in the natural frequencies of the structure were used first as training data for the SVMs, and then to detect damage location.

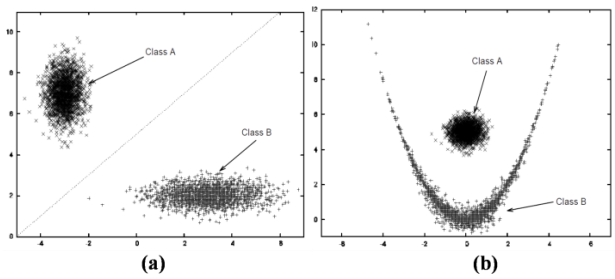

Fig.22 SVMs for data classification (a) linear separation; (b) nonlinear separation (Fulcher, 2006)

The main goal of this study was to reduce the number of sensors used to collect important data from the structure. The authors pointed out that this technique effectively decreased the possibility of incorrect damage detection. A comparison study of artificial neural networks (ANNs) and support vector machines (SVMs) has been presented which compares their performance in gear fault detection (Samanta, 2004). Vibration signals in the time-domain were used in this research for feature extraction. Moreover, the number of node in the hidden layer in the case of ANNs and kernel parameters in the case of SVMs were optimized using genetic algorithms. The researchers used experimental data for a known machine to train the ANNs and SVMs. The findings showed that the classification accuracy of SVMs is better than that of ANNs without GA, and the performance of both classifiers increased when GA was used. Additionally, Zhong *et al.* (2010) used SVMs for the intelligent diagnosis of gearbox faults. An experimental test rig was prepared to simulate the most common faults occurring in the gearbox, such as imbalance and misalignment. It was concluded that the SVMs are able to precisely recognize different fault types and their severity.

A research study was conducted by a group from Liverpool University, UK, using SVMs technique to detect and classify of faults in rolling bearings depending on vibration signals in the time-domain (Rojas and Nandi, 2006). Four bearing faults were simulated in this study: an inner race fault, outer race fault, rolling element fault and cage fault. It was found that the accuracy of SVMs is minimized if there is a limited amount of training data. Furthermore, this technique has been utilized for the purpose of rotor failure assessment (Yan *et al.*, 2009). It found that the SVM was reasonable and effective assessment of machinery degradation especially in complicated operating conditions since it does not have limits of input parameters, and the computational required time is also short. On the other hand, Caccavale *et al.* (2009) reported that "the main drawback of the SVMs is the absence of control over the number of data points

selected as SVs by the learning algorithm. This may lead to a heavy computational load in the presence of a large number of training data". From the above it can be concluded that SVMs for condition monitoring is still under development and requires further investigation.

5.5 Hybrid systems

A hybrid intelligent system is a combination of at least two of the intelligent approaches mentioned so far to achieve more accurate results and better performance. A hybrid system can combine the advantages of different technologies. The main concept of hybrid systems is to create new approaches where the components complement each other's weakness (Lim., 2009, Negnevitsky, 2005, Munakata, 2008). Recently, there has been an explosive growth in the use of variety of hybrid intelligent systems in condition monitoring as will be shown in this section.

5.5.1 Neural-fuzzy and fuzzy-neural systems

Neural networks have the capabilities of learning, memorizing, and recognizing patterns in a way the fuzzy systems do not. In contrast, the strength of fuzzy logic lies in its ability to model the decision-making of humans. So, the synergetic integration of neural networks and fuzzy logic can complement each other (Munakata, 2008, Negnevitsky, 2005). A growing number of researchers have constructed and examined different forms of neural-fuzzy or fuzzy-neural networks. Yen and Meesad (2001) developed a classification algorithm based on fuzzy neural networks called the incremental learning fuzzy neural (ILFN) network. This technique has the capability of learning new information without forgetting old information. The authors concluded that this this approach to classification is better than many recognized classifiers. Additionally, an evaluation study has been conducted to discuss the usability of three artificial intelligence (AI) methods in lathe turning tool wear estimation (Balazinski *et al.*, 2002). These methods were the feed-forward back-propagation neural network, a fuzzy decision support system, and neural network-based-fuzzy inference system with moving consequents in if-then rules. All three methods gave similarly acceptable results, but there were differences in the training time required. The neural network and fuzzy logic systems needed a considerable amount of training data. On the other hand, the training time was very short for the neuro-fuzzy system, making it easy to optimize and use in industry.

In another study, a neuro-fuzzy system was applied for the detection of faults in alternating current motors (Sainz Palmero *et al.*, 2005). This method was tested using an AC motor, and 15 non-destructive fault types were generated. The results showed good levels of detection and classification. Moreover, the knowledge extracted by a fuzzy rule set had an acceptable degree of interpretability. A multiple adaptive neruo-fuzzy inference system (MANFIS) methodology has also been applied to detect cracks in dynamic structures (Parhi and Das, 2010). The input layer of the controller was the fuzzy layer and the other layers were neural layers. The relative deviation of the first three frequencies and mode shapes were used as inputs to the fuzzy layer, and the outputs of this layer were used as inputs to the neural layer. The final findings from the use of this method were relative crack depth and relative crack location, showing good agreement with experimental results collected using an aluminum beam with transverse cracks.

5.5.2 Genetic algorithm-fuzzy system

A genetic algorithm has a perfect machine learning capability and satisfactory global search ability, whereas its drawback is chance-dependent outcomes and lengthy computation time. When combined with the benefits of fuzzy logic mentioned earlier, it introduces flexible and robust inference methods under high possibility of imprecision and uncertainty. An improved artificial intelligence technique called a genetic-fuzzy system (GFS) can be developed by the hybridization of a genetic algorithm and fuzzy logic. The genetic-fuzzy system combines the learning ability of the genetic algorithm with the uncertainty representation characteristics of fuzzy logic (Munakata, 2008, Pawar and Ganguli, 2003). A genetic-fuzzy system has been utilized for damage detection in a cantilever beam and helicopter blades (Pawar and Ganguli, 2003). This method was used to find the existence, location, and extent of damage. In order to calculate changes in beam frequencies because of structural damage, a finite element model of a cantilever beam was applied. These changes in frequencies were used to generate the fuzzy system, and rule-base and membership function optimized by a genetic algorithm. It was concluded that this system allows easy rule generation for different structures. The same technique was used in a similar study by the same research group to detect cracks in a thin-walled hollow circular cantilever beam, which was made of composite material and used as part of a helicopter structure (Pawar and Ganguli, 2005). It was found that the effectiveness of this method depends on the number of parameters, such as crack density and noise level. Furthermore, it was observed that the genetic-fuzzy system showed reasonable performance in damage detection and isolation.

Genetic algorithms have also been used for optimizing fuzzy system parameters. This technique has been applied to monitor the performance of a cutting machine (Gallova, 2010). A simulation study was conducted along with experimental work for result validation. The findings from the experimental work showed good concurrence with theoretical results, and it was concluded that the proposed technique is suitable for large-scale problems because of the ability of genetic algorithm to extract the most effective features from a considerable number of parameters. Furthermore, this hybrid technique has been used in medical diagnosis applications to achieve correct disease classifications (Di Nuovo and Catania, 2007). The authors' main aim of this study was to obtain an efficient diagnostic system and at the same time reliable and easy for practitioners to use. The approach was applied to three real-world benchmarks and compared with relevant work to show its effectiveness.

6. Intelligent embedded device for condition monitoring

An embedded system is a special purpose device which consists of computer hardware with software embedded in it, and has a set of dedicated specific functions to be performed, often with real-time computing limits. Embedded devices can be used to control, monitor or assist in the operation of equipment, machinery or plant. They differ from general purpose computers such as a personal computer (PC) which are to be flexible enough to perform many different tasks and to meet a wide range of user requirements. The prime differences between embedded systems and PC computers are that the former (Collins, 2000):

1- Often do not have displays or keyboards.
2- Usually come within larger systems or machines.
3- Usually have hard constraints such as small memory, slow CPU or real-time response.

Embedded systems are found in many applications, including modern cars, airplanes, and robots. Their main merits are low-cost, flexible structure, steady performance, small size, low power consumption, high reliability and integration, and the ability to work in constricted spaces and tough environments (Wang, 2009, Sarrafzadeh *et al.*, 2006). Fig. 23 shows the basic structure of an embedded system.

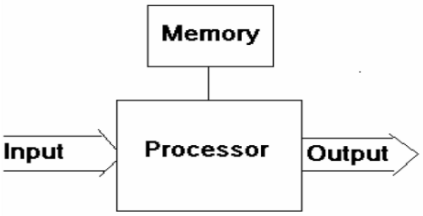

Fig.23 Basic structure of embedded system (M, 2002)

Basically, all embedded systems contain a processor and software to execute instructions. Also, there must be a memory to store the executable code, and input and output devices. Sensors and probe devices can be used to provide input to embedded systems. Outputs generally display the changes in the physical world or communications signals (M, 2002).

Embedded systems are one of the most widely used types of device in a lot of current applications. For example, one research study described the applications of embedded systems for diagnostic and maintenance planning in health care applications for patients with chronic diseases (Srovnal and Penhaker, 2007). The researchers discussed that their embedded systems have to be portable, non-intrusive, and low in weight and cost in order to be suitable for use. This research also suggests that embedded home care systems could be used as predictive diagnostic systems. Interestingly, proposed applications of embedded system have expanded to include home safety and environment (Zhai and Cheng, 2011). In this study an embedded system was designed to monitor smog percentage and gas parameters, and to collect video information from within a house. Fig. 24 shows the architecture of the proposed system, which basically contains two controllers (a main controller and an expansion module), and a number of different sensors connected to them. In addition, this system has the ability to communicate remotely with household appliances using a global system for mobile communications (GSM).

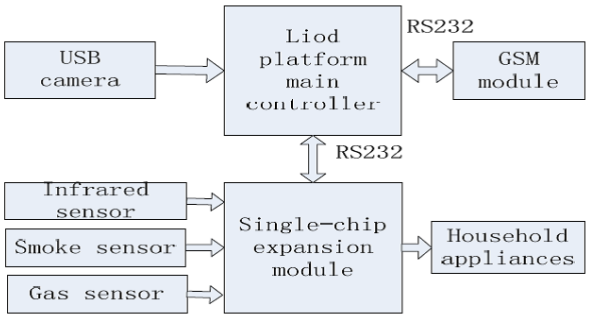

Fig.24 Embedded system for household appliance monitoring (Zhai and Cheng, 2011)

Recent years witnessed high trends to the embedded systems for machine fault detection and diagnosis. An embedded system which implements self-organizing maps has been applied to the on-line detection and classification of faults in the electrical valves used for flow control (Gonçalves *et al.*, 2009).The aim was to build a proactive maintenance scheme for these valves. A mathematical model of the valve was used to train the map for using the fault detection process. Moreover, for fault classification, training was carried out by fault injection based on parameter deviations using the same model. Throughout the on-line monitoring, the embedded system works to find the best matching between the current torque and position, and their values which were calculated using the trained map. It was found that the embedded system is a promising solution for predictive maintenance in these actuators, and its cost is relatively inexpensive. In similar research, a distributed intelligent monitoring system based on embedded technology was presented (Liang *et al.*, 2007).The system was designed using reduced instruction set computing (RISC) microprocessor embedded with a real-time multi-task kernel, and it has a wireless code-division multiple access (CDMA) communication network. This system has the capabilities of data acquisition, signal pre-processing, mass storage, real-time monitoring, and remote intelligent control. The investigation was conducted in the oil exploration and production industry, and it was observed that the system has high performance, reliability, and security. Moreover, because of its software and hardware flexibility, it can be used for a wide range of applications.

Wireless sensor networks are a type of solutions which is increasingly employed in condition monitoring applications. An on-line condition monitoring system based on a wireless sensor network and embedded microprocessors has been designed for vehicle fault diagnosis (Shukla *et al.*, 2009).The system consists of a large number of sensors able to communicate with each other through a wireless network. The sensors were used to get live data from the vehicle, such as for oil temperature, wheel balancing, and fuel level. The

embedded microprocessors gather the data and send them to an external monitoring entity. Likewise, another paper has suggested an intelligent diagnosis system combining the principles of the wireless sensor network (WSN) and a multi-agent system (MAS) (Wu *et al.*, 2011).This system was proposed because of the needs for high sampling rates, high precision, high speed and large amounts of data transmitted from mechanical equipment. The efficiency of the system for a coal preparation plant was investigated, and its practicability was proven.

A recent study has applied the principles of an embedded system to helicopter gearbox monitoring (Qin and Hu, 2012). The aim of this work was to design an embedded wireless sensor node which can be fixed to the planetary gears' carrier in order to gather vibration signals to be sent to an external receiver through the antenna which extends into the gearbox. Then, the acquired signal is analyzed using a single processing device. An experimental system consisting of a set of planetary gears built using one sun gear and four planetary gears was constructed. Additionally, four wireless sensor nodes were installed in the space between each two neighboring gears, as illustrated in Fig. 25.

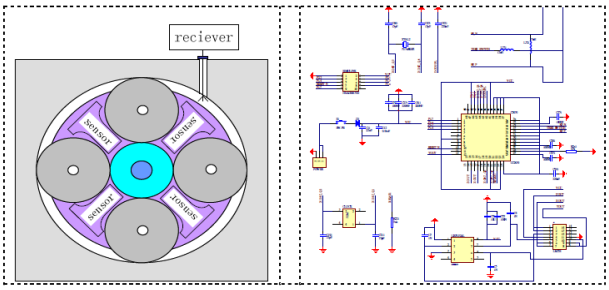

(A) **(B)**

Fig.25 Proposed embedded system for planetary gears monitoring A) sensor node location, and B) schematic diagram of sensor node (Qin and Hu, 2012)

Three important issues were taken into consideration in the hardware design. The first was the selection of an adaptive sensor that could achieve vibration measurement. Secondly, the processor responsible for signal acquisition, processing, and data transmission, had to be carefully selected, and the special antenna needs to be designed to have the ability to communicate. Finally, because the sensor nodes had to be fixed in the gearbox and could at all times turn with the planetary gears, the protection requirements were very strict. As a result, the researchers applied a type of soft encapsulation method based on disphenol A epoxy resin mixed with amine hardener to accomplish good communication performance. Another application of embedded system is in structural health monitoring. Rad and Shafai (2009) utilized wireless embedded sensors as a successful alternative to fiber optics sensors to assess the state of the infrastructure of bridges in North America. Furthermore, wireless sensor networks have shown sufficient potentiality in data collection when they have been applied to monitor wind turbine blades (Taylor *et al.*, 2011). Here piezotronic accelerometers were used to pick up the signals from blades in both healthy and damaged states, and these sensors were fixed at different positions on the blades. Wireless data acquisition (WiDAQ) was also utilized, as shown in the Fig. 26. Micro-electro-mechanical-sensors (MEMS) have also been used for condition monitoring. For instance, a tiny and very light weight MEMS accelerometer has been mounted on a rotor shaft to monitor its dynamic behavior (Elnady *et al.*, 2011). The accelerometer was connected to a wireless sensor nod for the wireless transmission of vibration signals, as shown in Fig. 27. Without any added imbalance and at different rotating speeds, vibration measurements such as acceleration values were taken and the findings were acceptable. It was reported that this technique assisted in reducing the number of sensors needed to monitor the rotating parts.

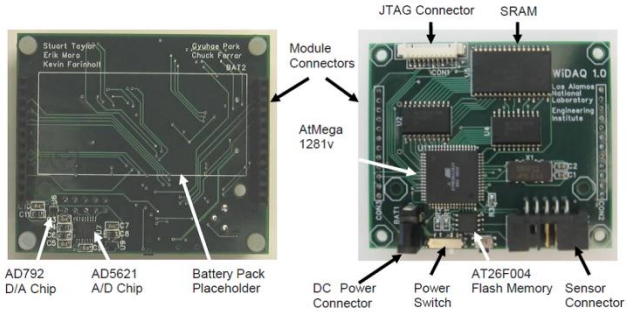

Fig.26 The main component of WiDAQ data acquisition (Taylor *et al.*, 2011)

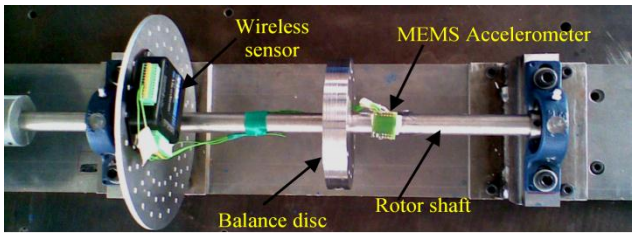

Fig.27 Vibration measurement using MEMS accelerometer (Elnady *et al.*, 2011)

Interestingly, the vast developments in smartphones and portable devices have changed the traditional way of using them. A paper has presented a remote monitoring system for a rotating machine can be run based on smartphone or PAD (personal digital assistant) (Wanbin and Tse, 2006). In this paper the developers put the capability of informing the concerned user if a fault appears in the remotely monitored machine. Other researchers have developed a scalable android application based on smartphone to diagnose three types of fault in industrial air compressor (Verma *et al.*, 2013a, Verma *et al.*, 2013b). The researchers mentioned that the developed system is very reliable. However, still this aspect of condition monitoring is lacking of exploration and needs to be under investigation.

Conclusions

It is clear that many different techniques of machine condition monitoring have been used, such as the analysis of vibration, acoustic emission, wear, thermal measurements, and chemistry. Vibration and acoustic

emission analysis represent the most important techniques that have been applied to monitor the status of industrial machines, and such methods have been widely studied by researchers. Generally speaking, the vast majority of the literature focuses on finding a monitoring system able to take the minimum and precise measurements necessary from machines, which can give clear indications of incipient fault modes in a minimum time. Moreover, the issue of feature extraction from data gathered has been a point of debate among many researchers. In short, to design a reliable condition monitoring system, sensors have to be chosen correctly in order to get accurate signals from faulty parts, and appropriate signal analysis techniques have to be employed since these have a significant impact on the sensitivity of the features extracted from the signals captured.

Recently, the field of the condition monitoring of machines has moved from the use of conventional techniques to artificial intelligence (AI) techniques. A wide variety of AI techniques have been applied extensively in monitoring very complex and non-linear systems such as industrial robots, where it is difficult to build accurate mathematical models of the system. However, each intelligent technique has strengths and weaknesses, and many studies have concluded that combining multiple methods can give better performance in many condition monitoring applications. Nevertheless, despite the large amount of research conducted in the area of artificial intelligence in condition monitoring, it is still inadequate and require significant investigation to be performed.

Moreover, recent developments in electronics and computing have opened new horizons in the area of condition monitoring. Embedded devices have been used as a promising solution, and have shown their practicality in fault detection and diagnosis processes in many of disciplines. The main aim of using embedded systems is to allow data analysis, which includes feature extraction and diagnostics, to be carried out locally at field level, which as a result will help to overcome the need for wiring. Furthermore, it seems that there is a serious shortage of studies applying these devices in industrial monitoring fields. Therefore, this needs to be investigated thoroughly by researchers and interested companies.

References

Aliustaoglu, C., Ertunc, H. M. & Ocak, H. Applied Real Time Bearing Fault Diagnosis Based On Vibration And Current Analysis. 2008. 258-262.

Aliustaoglu, C., Ertunc, H. M. & Ocak, H. 2009. Tool Wear Condition Monitoring Using A Sensor Fusion Model Based On Fuzzy Inference System. *Mechanical Systems And Signal Processing,* 23**,** 539-546.

Bae, H., Chun, S. P. & Kim, S. 2006. Predictive Fault Detection And Diagnosis Of Nuclear Power Plant Using The Two-Step Neural Network Models.

Balazinski, M., Czogala, E., Jemielniak, K. & Leski, J. 2002. Tool Condition Monitoring Using Artificial Intelligence Methods. *Engineering Applications Of Artificial Intelligence,* 15**,** 73-80.

Bittencourt, A. C., Axelsson, P., Jung, Y. & Brogardh, T. 2011. Modeling And Identification Of Wear In A Robot Joint Under Temperature Uncertainties. *Automatic Control*.

Brambilla, D., Capisani, L. M., Ferrara, A. & Pisu, P. Actuators And Sensors Fault Detection For Robot Manipulators Via Second Order Sliding Mode Observers. 2008. 61-66.

Caccavale, F., Cilibrizzi, P., Pierri, F. & Villani, L. 2009. Actuators Fault Diagnosis For Robot Manipulators With Uncertain Model. *Control Engineering Practice,* 17**,** 146-157.

Capisani, L. M., Ferrara, A., Ferreira, A. & Fridman, L. Higher Order Sliding Mode Observers For Actuator Faults Diagnosis In Robot Manipulators. 2010. 2103-2108.

Caselitz, P. & Giebhardt, J. 2005. Rotor Condition Monitoring For Improved Operational Safety Of Offshore Wind Energy Converters. *Journal Of Solar Energy Engineering, Transactions Of The Asme,* 127**,** 253-261.

Chandroth, G. O., Sharkey, A. J. C. & Sharkey, N. E. 1999. Cylinder Pressures And Vibration In Internal Combustion Engine Condition Monitoring. *Comadem 99.* Sunderland, Uk.

Chiang, D. Y. & Lai, W. Y. 1999. Structural Damage Detection Using The Simulated Evolution Method. *Aiaa Journal,* 37**,** 1331-1333.

Collins, C. M. 2000. *An Evaluation Of Embedded System Behavior Using Full-System Software Emulation.* Master Of Science, Maryland.

Datta, A., Mavroidis, C., Krishnasamy, J. & Hosek, M. Neural Netowrk Based Fault Diagnostics Of Industrial Robots Using Wavelt Multi-Resolution Analysis. American Control Conference, 2007 Usa. 1858-1863.

Di Nuovo, A. G. & Catania, V. Genetic Tuning Of Fuzzy Rule Deep Structures For Efficient Knowledge Extraction From Medical Data. 2007. 5053-5058.

Dobra, P., Truşcă, M., Sita, I. V., Munteanu, R. A. & Munteanu, M. Model Based Approach In Fault Detection And Diagnosis For Dc Motor. 2011. 229-233.

Dreyfus, G. 2005. Neural Networks, Methodology And Applications, Springer.

Elnady, M. E., Sinha, J. K. & Oyadiji, S. O. 2011. On-Shaft Wireless Vibration Measurement For Condition Monitoring Of Rotating Machine. *International Conference On Vibration Problems* Prague.

Elosegui, P. 1994. Measurement Of The Dynamic Modael Of A Puma 560 Robot Using Experimental Modal Analysis. *Journal Of Mechanical Design,* 116.\

Ertunc, H. M. & Oysu, C. 2004. Drill Wear Monitoring Using Cutting Force Signals. *Mechatronics,* 14**,** 533-548.

Filaretov, V. F., Vukobratovic, M. K. & Zhirabok, A. N. 1999. Observer-Based Fault Diagnosis In Manipulation Robots. *Mechatronics,* 9**,** 929-939.

Fulcher, J. 2006. Advances In Applied Artificial Intelligence, Idea Group Publishing.

Gallova, S. 2010. Fuzzy Parameters And Cutting Forces Optimization Via Genetic Algorithm Approach.

García-Escudero, L. A., Duque-Perez, O., Morinigo-Sotelo, D. & Perez-Alonso, M. 2011. Robust Condition Monitoring For Early Detection Of Broken Rotor Bars In Induction Motors. *Expert Systems With Applications,* 38**,** 2653-2660.

Goldberg, D. E. 1989. Genetic Algorithms In Search, Optimization, And Machine Learning, Addison-Wesley.

Gonçalves, L. F., Bosa, J. L., Henriques, R. V. B. & Lubaszewski, M. S. Design Of An Embedded System For The Proactive Maintenance Of Electrical Valves. 2009.

Halme, J. Condition Monitoring Of A Material Handling Industrial Robot. 19th Internation Congress, 2006 Lulea,Sweden.

Heng, A. S. Y. 2009. *Intelligent Prognostics Of Machinery Health Utilising Suspended Condition Monitoring Data.* Ph.D, Queensland University Of Technology.

Jaber, A. & Bicker, R. Industrial Robot Fault Detection Based On Wavelet Transform And Labview. First International Conference On Systems Informatics, Modelling And Simulation, 2014 Sheffield, United Kingdom. Ieee Computer Society.

Jack, L. B. & Nandi, A. K. 2000. Genetic Algorithms For Feature Selection In Machine Condition Monitoring With Vibration Signals. *Iee Proceedings: Vision, Image And Signal Processing,* 147**,** 205-212.

Janier, J. B. & Fazrin Zaim Zaharia, M. Condition Monitoring System For Induction Motor Using Fuzzy Logic Tool. 2011. 3-7.

Kim, E. Y., Tan, A. C. C., Mathew, J. & Yang, B. S. 2008. Condition Monitoring Of Low Speed Bearings: A Comparative Study Of The Ultrasound Technique Versus Vibration Measurements. *Australian Journal Of Mechanical Engineering,* 5**,** 177-189.

Kudva, J. N., Munir, N. & Tan, P. W. 1992. Damage Detection In Smart Structures Using Neural Networks And Finite-Element Analyses. *Smart Materials And Structures,* 1**,** 108-112.

Lee, Y. K., Mavris, D. N., Volovoi, V. V., Yuan, M. & Fisher, T. 2010. A Fault Diagnosis Method For Industrial Gas Turbines Using Bayesian Data Analysis. *Journal Of Engineering For Gas Turbines And Power,* 132.

Li, X., Zeng, H., Zhou, J. H., Huang, S., Thoe, T. B., Shaw, K. C. & Lim, B. S. 2007. Multi-Modal Sensing And Correlation Modelling For Condition-Basednmonitoring In Milling Machine. *Simtech Technical Reports.*

Liang, X., Li, E., Liang, Z., Hou, Z. G. & Tan, M. Intelligent Monitoring System Based On The Embedded Technology: A Case Study. 2007. 889-894.

Lim., W. L. 2009. *The Application Of Artificial Neural Networks For Sensor Validation In Diesel Engine Condition Monitoring And Fault Diagnosis.* M. Phil., University Of Newcastle Upon Tyne.

Liu, H., Wei, T. & Wang, X. Signal Decomposition And Fault Diagnosis Of A Scara Robot Based Only On Tip Acceleration Measurement. 2009. 4811-4816.

Lopes Jr, V., Park, G., Cudney, H. H. & Inman, D. J. 2000. Impedance-Based Structural Health Monitoring With Artificial Neural Networks. *Journal Of Intelligent Material Systems And Structures,* 11**,** 206-214.

M, S. P. 2002. Embedded Operating Systems For Real-Time Applications. Bombay.

Ma, H., Li, H., Xie, W. & Chen, F. Vibration Research On Winding Faults Of Induction Motor Based On Experiment Modal Analysis Method. 2007. 366-370.

Márton, L. On-Line Lubricant Health Monitoring In Robot Actuators. 2011. 167-172.

Meruane, V. & Heylen, W. 2011. An Hybrid Real Genetic Algorithm To Detect Structural Damage Using Modal Properties. *Mechanical Systems And Signal Processing,* 25**,** 1559-1573.

Mohseni, S. & Namvar, M. Fault Diagnosis In Robot Manipulators In Presence Of Modeling Uncertainty And Sensor Noise. 2009. 1750-1755.

Moslem, K. & Nafaspour, R. 2002. Structural Damage Detection By Genetic Algorithms. *Aiaa Journal,* 40**,** 1395-1401.

Munakata, T. 2008. Fundamentals Of The New Artificial Intelligence, London, Springer.

Navarro, L., Delgado, M., Urresty, J., Cusiḋ, J. & Romeral, L. Condition Monitoring System For Characterization Of Electric Motor Ball Bearings With Distributed Fault Using Fuzzy Inference Tools. 2010. 1159-1163.

Negnevitsky, M. 2005. Artificial Intelligence: A Guide To Intelligent Systems, Addison Wesley.

O.A.Olufayo, K.Abo-El-Hossein & Niekerk, T. V. 2011. Online Tool Wear Monitoring. *4th Roboic And Mechatronics* South Africa.

Olsson, E., Funk, P. & Xiong, N. 2004. Fault Diagnosis In Industry Using Sensor Readings And Case-Based Reasoning. *Journal Of Intelligent And Fuzzy Systems,* 15**,** 41-46.

Ong, Z. C., Rahman, A. G. A. & Ismail, Z. 2012. Determination Of Damage Severity On Rotor Shaft Due To Crack Using Damage Index Derived From Experimental Modal Data. *Experimental Techniques*.

Onsy, A., Bicker, R., Shaw, B. & Fouad, M. M. Application Of Image Registration Methods In Monitoring The Progression Of Surface Fatigue Failures In Geared Transmission Systems. 2012.

Ostachowicz, W., Krawczuk, M. & Cartmell, M. 2002. The Location Of A Concentrated Mass On Rectangular Plates From Measurements Of Natural Vibrations. *Computers And Structures,* 80**,** 1419-1428.

Osuri, R. H., Chatterjee, S. & Chandrashekhar, S. 1991. On-Line Condition Monitoring Of Tool Wear In End Milling Using Acoustic Emission. *International Journal Of Production Research,* 29**,** 1339-1353.

Pal, S., Heyns, P. S., Freyer, B. H., Theron, N. J. & Pal, S. K. 2011. Tool Wear Monitoring And Selection Of Optimum Cutting Conditions With Progressive Tool Wear Effect And Input Uncertainties. *Journal Of Intelligent Manufacturing,* 22**,** 491-504.

Pan, M. C., Van Brussel, H. & Sas, P. 1998. Intelligent Joint Fault Diagnosis Of Industrial Robots. *Mechanical Systems And Signal Processing,* 12**,** 571-588.

Parhi, D. R. & Dash, A. K. 2011. Application Of Neural Networks And Finite Elements For Condition Monitoring Of Structures. *Proceedings Of The Institution Of Mechanical Engineers, Part C: Journal Of Mechanical Engineering Science,* 225**,** 1329-1339.

Parhi, D. R. K. & Das, H. 2010. Diagnosis Of Fault And Condition Monitoring Of Dynamic Structures Using The Multiple Adaptive-Neuro-Fuzzy Inference System Technique. *Proceedings Of The Institution Of Mechanical Engineers, Part G: Journal Of Aerospace Engineering,* 224**,** 259-270.

Pawar, P. M. & Ganguli, R. 2003. Genetic Fuzzy System For Damage Detection In Beams And Helicopter Rotor Blades. *Computer Methods In Applied Mechanics And Engineering,* 192**,** 2031-2057.

Pawar, P. M. & Ganguli, R. 2005. Matrix Crack Detection In Thin-Walled Composite Beam Using Genetic Fuzzy System. *Journal Of Intelligent Material Systems And Structures,* 16**,** 395-409.

Qin, G. & Hu, N. 2012. Design Of Embedded Wireless Sensor And Its Soft Encapsulation For Embedded Monitoring Of Helicopter Planetary Gear Set. *Journal Of Physics: Conference Series,* 364.

Rad, M. F. & Shafai, L. A Wireless Embedded Sensor For Structural Health Monitoring Applications. Antenna Technology And Applied Electromagnetics And The Canadian Radio Science Meeting, 2009. Antem/Ursi 2009. 13th International Symposium On, 15-18 Feb. 2009 2009. 1-4.

Randall, R. B. 2004. Detection And Diagnosis Of Incipient Bearing Failure In Helicopter Gearboxes. *Engineering Failure Analysis,* 11**,** 177-190.

Rojas, A. & Nandi, A. K. 2006. Practical Scheme For Fast Detection And Classification Of Rolling-Element Bearing Faults Using Support Vector Machines. *Mechanical Systems And Signal Processing,* 20**,** 1523-1536.

Sainz Palmero, G. I., Juez Santamaria, J., Moya De La Torre, E. J. & Perán González, J. R. 2005. Fault Detection And Fuzzy Rule Extraction In Ac Motors By A Neuro-Fuzzy Art-Based

System. *Engineering Applications Of Artificial Intelligence,* 18**,** 867-874.

Samanta, B. 2004. Gear Fault Detection Using Artificial Neural Networks And Support Vector Machines With Genetic Algorithms. *Mechanical Systems And Signal Processing,* 18**,** 625-644.

Samarasinghe, S. 2007. Neural Networks For Applied Sciences And Engineering, Taylor And Francis Group, Llc.

Sarrafzadeh, M., Dabiri, F., Jafari, R., Massey, T. & Nahapetan, A. Low Power Light-Weight Embedded Systems. 2006. 207-212.

Seo, J., Yoon, H., Ha, H., Hong, D. & Kim, W. 2011. Infrared Thermographic Diagnosis Mechnism For Fault Detection Of Ball Bearing Under Dynamic Loading Conditions. Sanya.

Sharma, S. 2008. *Application Of Support Vector Machines For Damage Detection In Structures.* Msc, Worcester Polytechnic Institute.

Shimada, M. & Mita, A. Damage Assessment Of Bending Structures Using Support Vector Machine. 2005. 923-930.

Shimada, M., Mita, A. & Feng, M. Q. Damage Detection Of Structures Using Support Vector Machines Under Various Boundary Conditions. 2006.

Shiroishi, J., Li, Y., Liang, S., Kurfess, T. & Danyluk, S. 1997. Bearing Condition Diagnostics Via Vibration And Acoustic Emission Measurements. *Mechanical Systems And Signal Processing,* 11**,** 693-705.

Shukla, A. P., Garg, H., Varshneya, G. & Srivastava, A. K. Real Time Acquisition Of Vehicle Diagnostic Data Using Wireless Sensor Network. 2009. 89-93.

Skoundrianos, E. N. & Tzafestas, S. G. 2004. Finding Fault. *Ieee Robotics And Automation Magazine,* 11**,** 83-90.

Srovnal, V. & Penhaker, M. Health Maintenance Embedded Systems In Home Care Applications. 2007.

Taylor, S. G., Farinholt, K. M., Park, G., Farrar, C. R. & Todd, M. D. Application Of A Wireless Sensor Node To Health Monitoring Of Operational Wind Turbine Blades. 2011. 45-53.

Terra, M. H. & Tinós, R. 2001. Fault Detection And Isolation In Robotic Manipulators Via Neural Networks: A Comparison Among Three Architectures For Residual Analysis. *Journal Of Robotic Systems,* 18**,** 357-374.\

Tian, Z., Jin, T., Wu, B. & Ding, F. 2011. Condition Based Maintenance Optimization For Wind Power Generation Systems Under Continuous Monitoring. *Renewable Energy,* 36**,** 1502-1509.

Trendafilova, I. & Van Brussel, H. 2003. Condition Monitoring Of Robot Joints Using Statistical And Nonlinear Dynamics Tools. *Meccanica,* 38**,** 283-295.

Van, M., Kang, H. J. & Ro, Y. S. 2011. A Robust Fault Detection And Isolation Scheme For Robot Manipulators Based On Neural Networks.

Vemuri, A. T., Polycarpou, M. M. & Diakourtis, S. A. 1998. Neural Network Based Fault Detection In Robotic Manipulators. *Ieee Transactions On Robotics And Automation,* 14**,** 342-348.

Verma, N. K., Sarkar, S., Dixit, S., Sevakula, R. K. & Salour, A. Android App For Intelligent Cbm. 2013a.

Verma, N. K., Sevakula, R. K., Gupta, J. K., Singh, S., Dixit, S. & Salour, A. 2013b. Smartphone Application For Fault Recognition. *International Journal On Smart Sensing And Intelligent Systems,* 6**,** 1763-1782.

Wanbin, W. & Tse, P. W. Remote Machine Monitoring Through Mobile Phone, Smartphone Or Pda. 2006. 309-315.

Wang, Q. 2009. Artificial Neural Network And Hidden Space Svm For Fault Detection In Power System.

Wei, X. B., Zheng, W. & Lin, R. 2011. Design Of Labview-Based System Of Noise Measurement On Gear Box.

Wu, B., Lin, J. & Xiong, X. 2011. Design And Implementation Of Intelligent Monitoring And Diagnosis System Based On Wsn And Mas.

Yadav, S. K., Tyagi, K., Shah, B. & Kalra, P. K. 2011. Audio Signature-Based Condition Monitoring Of Internal Combustion Engine Using Fft And Correlation Approach. *Ieee Transactions On Instrumentation And Measurement,* 60**,** 1217-1226.

Yan, J., Ma, H., Li, W. & Zhu, H. Assessment Of Rotor Degradation In Steam Turbine Using Support Vector Machine. 2009.

Yen, G. G. & Meesad, P. 2001. An Effective Neuro-Fuzzy Paradigm For Machinery Condition Health Monitoring. *Ieee Transactions On Systems, Man, And Cybernetics, Part B: Cybernetics,* 31**,** 523-536.

Zhai, Y. & Cheng, X. Design Of Smart Home Remote Monitoring System Based On Embedded System. 2011. 41-44.

Zhang, E., Zhang, H. & Xue, B. Application Of Integrated Neural Network Based On Information Combination For Fault Diagnosis In Steam Turbine Generator. 2007. 1293-1297.

Zhang, Y. F., Ma, B., Zhu, Y. & Zhang, J. L. Study On Condition Monitoring Of Power-Shift Steering Transmission Based On Support Vector Machine. 2009.

Zhong, J., Yang, Z. & Wong, S. F. Machine Condition Monitoring And Fault Diagnosis Based On Support Vector Machine. 2010. 2228-2233.

Zurada, J. M. 1992. Introduction To Artificial Neural Systems.