International Journal of Current Engineering and Technology
ISSN 2277 - 4106

Available at http://inpressco.com/category/ijcet

Research Article

Voltage Quality Improvement by using Facts Devices

B.Sharath Kumar[Å*] and MD.Yaseen[Å]

[Å]Department of Electrical and Electronics Engineering, Anurag Group of Institutions, Andhra Pradesh, India

Accepted 25 December 2013, Available online 30 December 2013, **Vol.3, No.5 (December 2013)**

Abstract

This paper presents the analysis and control of a dynamic voltage restorer (DVR) and a unified power flow controller (UPFC) for the compensation of voltage sag/swell. A Unified Power Flow Controller (UPFC) is an electrical device for providing fast-acting reactive power compensation on voltage electricity *networks. Dynamic Voltage Restorer (DVR) is a custom power device used in power distribution networks to protect consumers from sudden sags and swells in grid voltage. Voltage sag/swell is one of the most important power quality problems challenging the utility industry. The DVR provides three-phase controllable voltage source, whose voltage vector (magnitude and angle) adds to the source voltage during sag event, to restore the load voltage to pre-sag conditions. The DVR is designed for protecting the whole plant with loads in the range of some MVA. The DVR can restore the load voltage within few milliseconds. A new topology based on Z-source inverter is presented in order to enhance the voltage restoration property of dynamic voltage restorer. The modeling of Z-source based dynamic voltage restorer and UPFC is carried out component wise and their performances are analyzed using MATLAB software.*

Keywords*: Unified Power Flow Controller (UPFC), Power Quality, Dynamic Voltage Restorer (DVR), Voltage sag/Swell, Z-Source inverter (ZSI), Pulse Width Modulation (PWM), Total Harmonic Distortion (THD).*

1. Introduction

The voltage sag/swell (Usha Rani et *al*, 2011) is the most common power quality related problems among the industries. Such voltage sag/swell has a major impact on the performance of the microprocessor based loads as well as the sensitive loads (Choi S et *al*, 2000). In a power line voltage sags/swells can occur as a result of load switching, motor starting, faults, lightning, non-linear loads, intermittent loads, etc.Apart from non-linear loads, some system events, both usual (capacitor switching, motor starting) and unusual (faults) could also inflict power quality problems. The consequence of power quality problems could range from a simple nuisance flicker in electric lamps to a loss of thousands of rupees due to power shutdown. A power quality problem is defined as any manifested problem in voltage or current of leading to frequency deviations that result in failure or miss operation of customer equipment. Power quality problems associated with an extensive number of electromagnetic phenomena in power systems with broad ranges of time frames such as long duration variations, short duration variations and other disturbances. Short duration variations are mainly caused by either fault conditions or energisation distance related to impedance type of grounding and connection of transformer between the faulted location and node, there can be temporary load of voltage reduction (sag) or voltage rise (swell) at different nodes of the system.

Voltage sag (Loh P. C *et al*, 2004) is defined as a sudden reduction in supply voltage to between 90% and 10% of the nominal value, followed by a recovery after a short interval. The standard duration of sag is between 10 milliseconds and 1 minute. Voltage sag can cause loss in production in automated processes since voltage sag (Sira-Ramirez H *et al*, 1995) can trip a motor or cause its controller to malfunction. Voltage swell is defined as sudden increase in supply between 110% and 180% of the nominal value of the duration of 10 milliseconds to 1 minute. Switching off a large inductive load or energizing a large capacitor bank is a typical system event that causes swells. To compensate the sag/swell in a system, appropriate devices need to be installed at suitable locations.

Table 1 Definitions for Voltage Sag and Swell

Type of disturbance	Voltage	Duration
Voltage Sag	0.1 – 0.9 pu	0.5 – 30 cycles
Voltage Swell	1.1 – 1.8 pu	0.5 – 30 cycles

The focus of this thesis is a FACTS device known as the Unified Power Flow Controller (UPFC) and Dynamic

*Corresponding author **B.Sharath Kumar** is a PG Scholar and **MD.Yaseen** is working as Assistant Professor(EEE Dept) in **Anurag Group of Institutions**,**Hyderabad**

voltage restorer. Dynamic voltage restorer is a voltage sag/swell mitigation device in electrical power distribution networks. The dynamic voltage restorer, with its excellent dynamic capabilities, when installed between the supply and a critical load feeder, can compensate for voltage sags/swells, restoring line voltage to its nominal value within few milliseconds and hence avoiding any power disruption to the load. UPFC With its unique capability to control simultaneously real and reactive power flows on a transmission line as well as to regulate voltage at the bus where it is connected, this device creates a tremendous quality impact on power system stability. These features become even more significant knowing that the UPFC can allow loading of the transmission lines close to their thermal limits, forcing the power to flow through the desired paths. This will give the power system operators much needed flexibility in order to satisfy the demands that the deregulated power system will impose. The UPFC converters are assumed lossless in this voltage sources model. This implies that there is no absorption or generation of active power by the two converters for its losses and the active power demanded by the series converter at its output is supplied from the AC Power system by the shunt converters via the common D.C link.

The Z-source converter (Gajanayake C. J *et al*, 2005),(Loh P. C *et al*, 2004) employs a unique X-shaped impedance network on its dc side for achieving both voltage buck and boost capabilities this unique features that cannot be obtained in the traditional voltage-source and current-source converters. The proposed system is able to compensate long and significantly large voltage sags (Gajanayake C. J et *al*, 2005), (Peng F. Z *et al*, 2003) and (Torabzad S *et al*, 2010).

In this paper the modeling and control of voltage sag/swell compensation using Z-Source inverter based dynamic voltage restorer and unified power flow controller are simulated using MATLAB software. The simulation results are presented to show the effectiveness of the proposed control methods.

2. Dynamic Voltage Restorer

The DVR (Jimichi T *et al*, 2005) employs IGBT solid-state power-electronic switching devices in a pulse-width modulated (PWM) inverter structure and is capable of generating or absorbing independently-controllable real and reactive power at its ac power-frequency transformer. So, the transformer size, weight and stress factor is reduced considerably (Jimichi T *et al*, 2005). Output terminal. Its dc input terminal is connected to an energy source or an energy storage device of appropriate capacity.

The DVR is a solid-state dc to ac switching power converter that injects a set of three-phase ac output voltage in series and synchronism with the distribution feeder voltages. The amplitude and phase angle of the injected voltages are variable thereby allowing control of the real and reactive power exchange between the DVR and the distribution system within predetermined positive (power supply) and negative (power absorption) limits. The PWM main inverter structure within the prototype portable trailer enclosure. The reactive power exchanged between the DVR and the distribution system is internally generated by the DVR without any ac passive reactive components, e.g. reactors or capacitors. Real power exchanged at the DVR (Choi S et *al*, 2000) ac terminals must be provided at the DVR dc terminal by an external energy source or energy storage system.

In Custom Power applications, the DVR is connected in series with the distribution feeder. By inserting voltages of controllable amplitude, phase angle and frequency (fundamental and harmonic) into the distribution feeder via a series insertion transformer, the DVR can restore the quality of voltage at its load-side terminals when the quality of the source-side terminal voltage is significantly out of specification for sensitive load equipment. Dynamic voltage restorer was originally proposed to compensate for voltage disturbances on distribution systems. A typical DVR scheme is shown in Fig. 1.

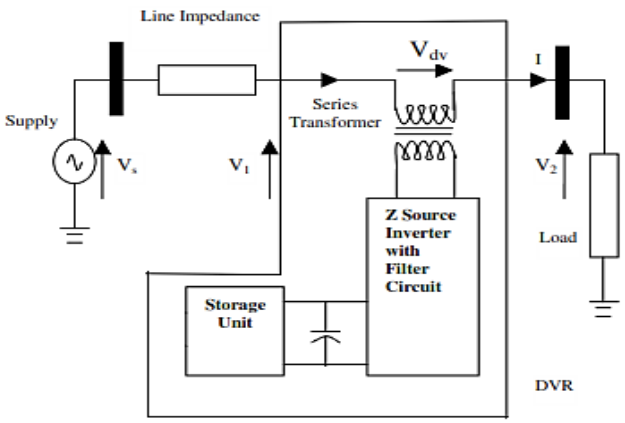

Fig.1: Schematic representation of the DVR

In the Fig. 1, Vg is the source voltage, V1 is the incoming supply voltage before compensation, V2 is the load voltage after compensation, is the series injected voltage of the DVR and I is the line current. The restorer typically consists of an injection transformer, the secondary winding of which is connected in series with the distribution line, a pulse- width modulated (PWM) voltage source inverter (VSI) bridge connected to the primary of the injection transformer and an energy storage device connected at the dc-link of the inverter bridge. The series injected voltage of the DVR, Vdvr, is synthesized by modulating pulse widths of the inverter-bridge switches. The injection of an appropriate Vdvr in the face of an up-stream voltage disturbance requires a certain amount of real and reactive power supply from the DVR. The reactive power requirement is generated by the inverter. Widely used in present DVR control is the so-called in phase voltage injection technique where the load voltage V2 is assumed to be in-phase with the pre-sag voltage.

The corresponding phasor diagram describing the electrical conditions during voltage sag is depicted, where only the affected phase is shown for clarity. Let the voltage quantities Il, φ, δ and α represent the load current, load power factor angle, supply voltage phase angle and load voltage advance angle respectively. Although there is

a phase advancement of α in the load voltage with respect to the pre-sag voltage in Fig. 2, only in-phase compensation where the injected voltage is in phase with the supply voltage (α = δ) is considered.

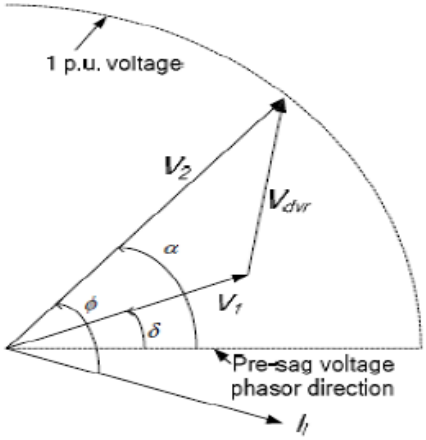

Fig. 2 Vector Diagram of Voltage Injection Method

3. Z-Source Inverter

Z-source inverter has X-shaped impedance network on its DC side, which interfaces the source and inverter H-bridge. It facilitates both voltage-buck and boost capabilities. The impedance network composed of split inductors and two capacitors. The supply can be DC voltage source or DC current source or AC source. Z-source inverter can be of current source type or voltage source type.

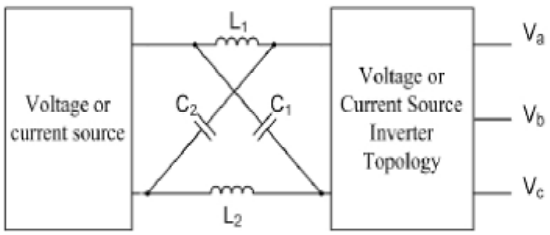

Fig. 3 General Block Diagram of Z-Source Inverter

Fig. 3 shows the general block diagram of Z-Source inverter voltage.

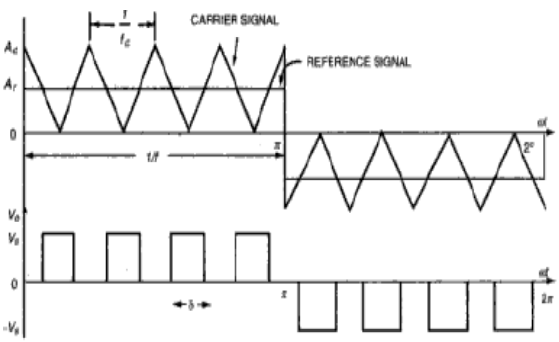

Fig. 4 Multiple Pulse Width Modulation

Z-Source inverter operation is controlled by multiple pulse width modulation. The output of the Z-Source (Peng F. Z *et al*, 2003) inverter is controlled by using pulse width modulation, generated by comparing a triangular wave signal with an adjustable DC reference and hence the duty cycle of the switching pulse could be varied to synthesize the required conversion. A stream of pulse width modulation is produced to control the switch as shown in the Figure 4.

As shown in Table I, the single-phase Z-Source inverter has five switching modes. Two active modes in which the dc source, voltage is applied to load, two zero modes in which the inverter's output terminals are short circuited by *S1* and *S3* or *S2* and *S4* switches and a shoot-through mode which occurs as two switches on a single leg are turned on.

Table 2 switching modes

S4	S3	S2	S1	Switching mode
1	0	0	1	Active mode
0	1	1	0	
0	1	0	1	Zero mode
1	0	1	0	
0 or 1	0 or 1	1	1	Shoot-through mode

Applying a distinctive PWM method is necessary for ZSI considering the defined operational modes. In a symmetric impedance network, the following equations are valid:

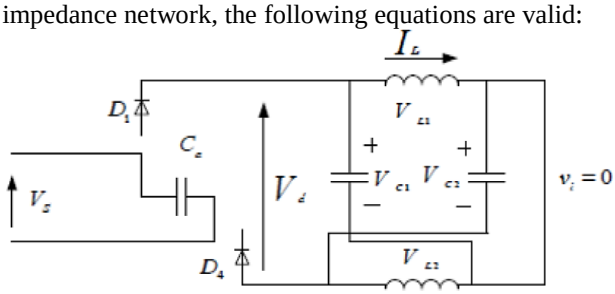

Fig. 5 Shoot through mode

$$C1 = C2 = C \quad (1)$$
$$L1 = L2 = L \quad (2)$$
$$I\,L1 = I\,L2 = I\,L \quad (3)$$
$$V\,C1 = V\,C2 = V\,C \quad (4)$$

The voltage of capacitors in a symmetric impedance network is as follows:

$$V\,i = \beta\,V\,dc \quad (5)$$
$$\beta = 1/\,[1 - 2(T0/T) \quad (6)$$

Where, *T0* and *T* show the shoot-through mode application period and switching period, respectively. Also, the following relation is valid in symmetric impedance networks:

$$Vi = 2VC - Vdc \quad (7)$$

It should be noted that the relations mentioned above are extracted by averaging the ZSI operational modes. The

shunt full bridge rectifier with the input capacitor *Ca* which feeds the impedance network is shown in Fig. 6. During the commutation between diodes, it is possible to face with surge voltage due to line inductance and shoot-through mode operation. The input capacitor is used to suppress this surge voltage. Diodes *D1* and *D4* are turned on if the input voltage of rectifier is positive. Diodes *D3* and *D2* are turned on if the input voltage of rectifier is not positive.

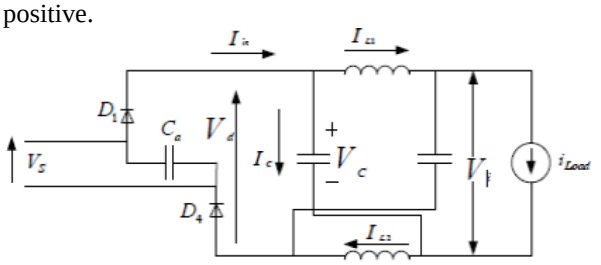

Fig. 6 Active mode

The equivalent circuits of rectifier fed ZSI in shoot-through and active modes are presented in Figs. 5 and 6 respectively. The following is obtained according to that equivalent circuit:

$$Vd = VL1 + VC2 \quad (8)$$
$$VL1 = VC1 \quad (9)$$

Where *Vd* is the impedance network input voltage. Considering (4), (8) and (9), the following relation is obtained:

$$Vd = 2VC \quad (10)$$

In shoot-through mode operation, the rectifier is not able to inject current and energy to impedance network. Fig. 6 shows the equivalent circuit of ZSI in active mode. Considering Fig. 6, the following relation is obtained,

$$Vd = Vs\,(t) - 2Vg \quad (11)$$

4. UPFC System

The Unified power flow controller is the most versatile of the FACTS controllers. It can perform not only the phase angle regulator but also provides additional flexibility by combining some of the functions of the above controllers.

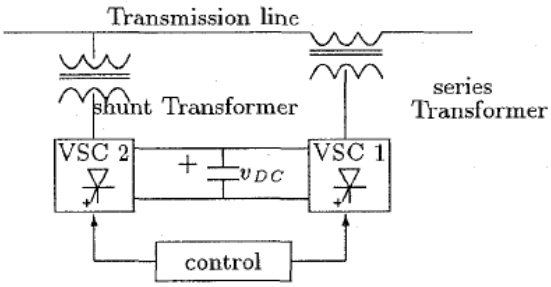

Fig.7 UPFC system

The main function of the UPFC is to control the flow of real and reactive power by injection of a voltage in series with the transmission line. Both the magnitude and phase angle of the voltage can be varied independently. Real and reactive power flow control can allow for power flow in prescribed routes, loading of transmission line closer to their thermal limits and can be utilized for improving transient and small signal stability of the power system. The schematic of the UPFC is shown in figure.

The UPFC consists of a 2 branches. The series branch consists of a voltage source converter which injects a voltage in series through a transformer. Since the series branch of the UPFC can inject a voltage with variable magnitude and phase angle it can exchange real power with the transmission line. However the UPFC as a whole cannot supply or absorb real power in steady state unless it has a power source at its DC terminals. The shunt branch is required to compensate for any real power drawn/supplied by the series branch and the losses. If the power balance is not maintained, the capacitor cannot remain at a constant voltage.

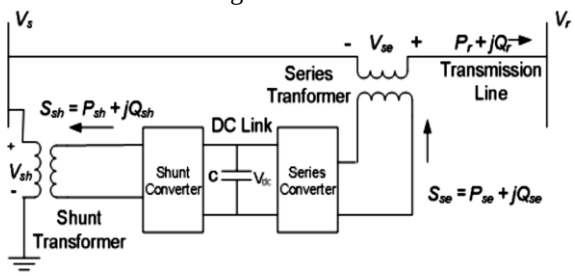

Fig. 8 Basic circuit arrangement of UPFC

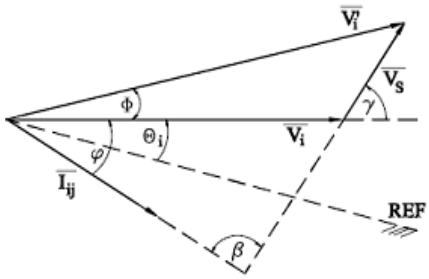

Fig. 9 Phasor Diagram of UPFC

The UPFC can be used to control the flow of active and reactive power through the transmission line and to control the amount of reactive power supplied to the transmission line at the point of installation. The series inverter is controlled to inject a symmetrical three phase voltage system of controllable magnitude and phase angle in series with the line to control active and reactive power flows on the transmission line. So, this inverter will exchange active and reactive power with the line. The reactive power is electronically provided by the series inverter, and the active power is transmitted to the dc terminals. The shunt inverter is operated in such a way as to demand this dc terminal power (positive or negative) from the line keeping the voltage across the storage capacitor constant. So, the net real power absorbed from the line by the UPFC is equal only to the losses of the inverters and their transformers. The remaining capacity of the shunt inverter can be used to exchange reactive power with the line so to provide a voltage regulation at the connection point.

5. Matlab Modeling and Simulation Results

Here Simulation is carried out in different conditions. In that
1). Compensation of Three Phase Voltage Sag and Voltage Swell Using DVR
2). Compensation of Three Phase Voltage Sag and Voltage Swell Using UPFC

Case 1: Compensation of Three Phase Voltage Sag and Voltage Swell Using DVR

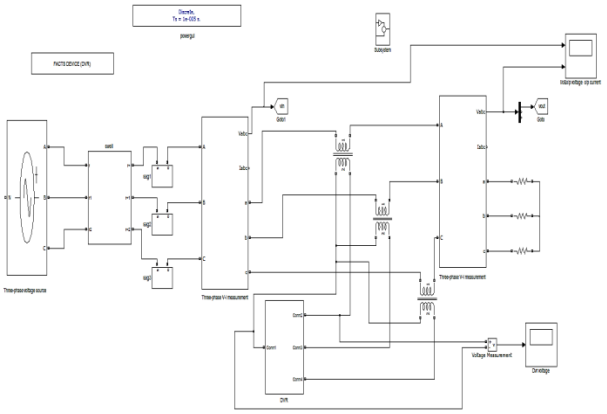

Fig.10 Matlab/Simulink Model of Proposed Three Phase DVR

Fig.10 shows the Matlab/Simulink Model of Proposed Three Phase DVR using Matlab/Simulink Platform.

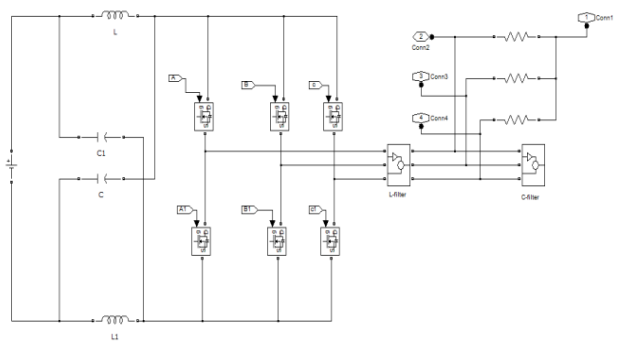

Fig: 11 Shows the z-source inverter for the proposed three phase DVR model.

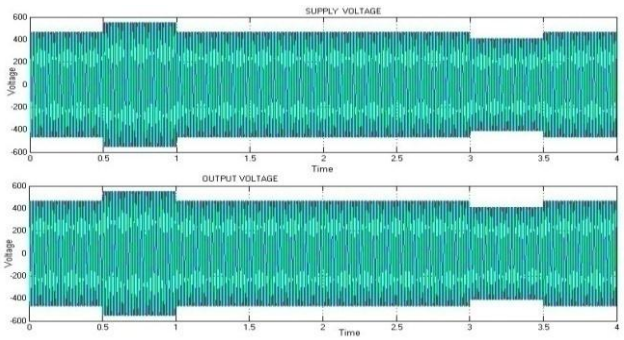

Fig.12 Supply Voltage & Output Voltage

Fig.12 shows the Supply & Output Voltages without DVR, both voltage sag & swell problem in output voltage.

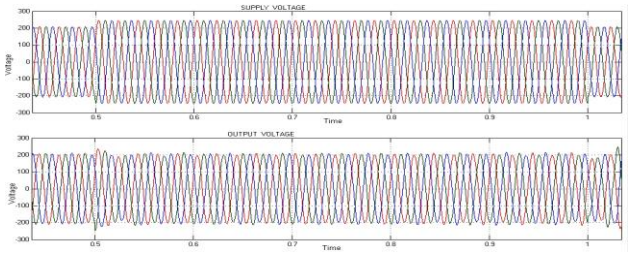

Fig. 13(a) Source voltage and Load voltage during Voltage Swell for the proposed three phase DVR model.

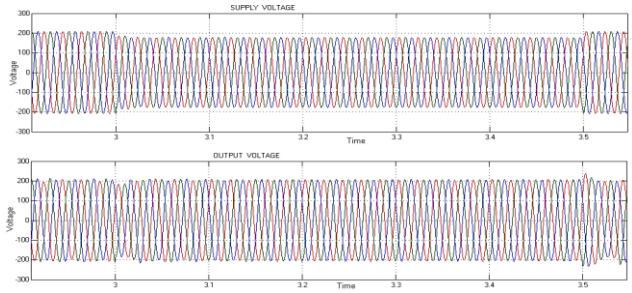

Fig. 13(b) Source voltage and Load voltage during Voltage Sag for the proposed three phase model.

Figure13 (a) & 13(b) shows simulation results for voltage sag/swell compensation. When increase and decrease in supply voltage, the DVR maintains the constant output voltage due to swell & sag condition.

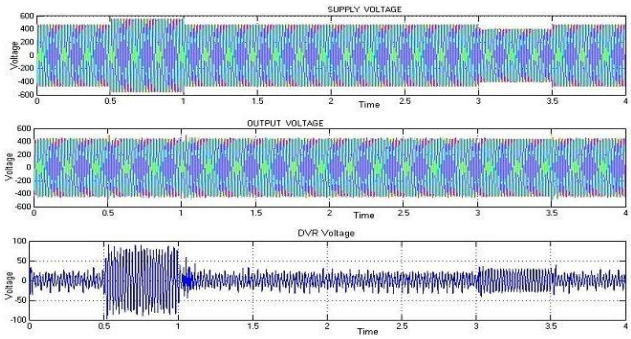

Fig.14 Supply Voltage, Output Voltage and dvr voltage

Figure:14 Voltage swell and sag occurs in the input supply voltage that time inverter buck the voltage in the swell condition and boost the voltage in the sag condition but the output voltage maintain constant.

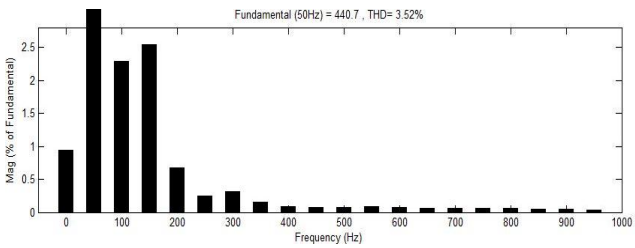

Fig.15 THD of load voltage

Fig. 15 shows the load voltage total harmonic distortion of 3.52% at fundamental frequency 50Hz.

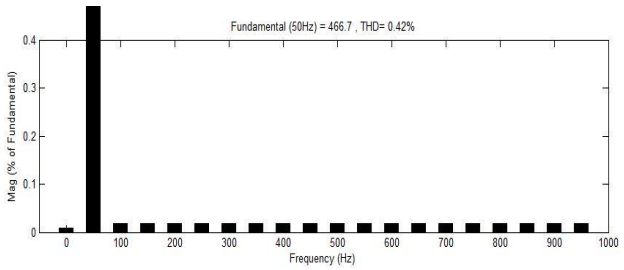

Fig.16 THD of source voltage

Fig. 16 shows the source voltage total harmonic distortion of 0.42% at fundamental frequency 50Hz.

Case 2: Compensation of Three Phase Voltage Sag and Voltage Swell Using UPFC

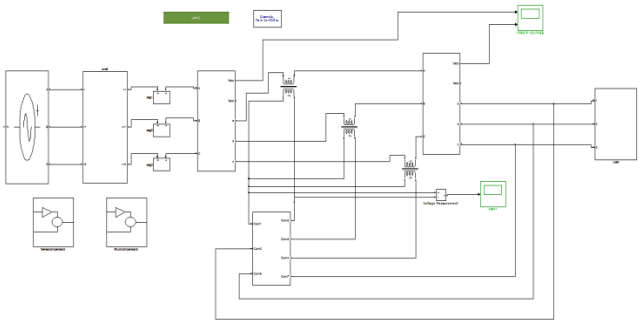

Fig.17 Matlab/Simulink Model of Proposed Three Phase UPFC

Fig.17 shows the Matlab/Simulink Model of Proposed Three Phase UPFC using Matlab/Simulink Platform.

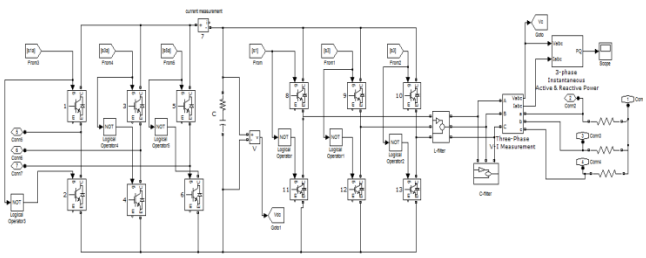

Fig. 18 Shows the series and shunt converters for the proposed three phase UPFC model.

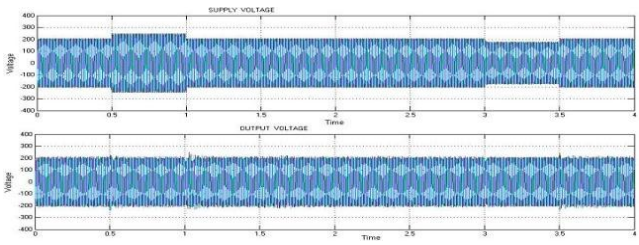

Fig.19 Supply Voltage & Output Voltage

Fig.19 shows the Supply Voltage & Output Voltage of with UPFC, both voltage sag & swell problem compensates by using series compensator and output voltage maintains constant.

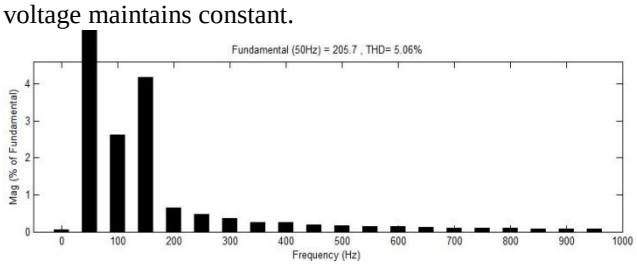

Fig.20 THD of load voltage

Fig. 20 shows the load voltage total harmonic distortion of 5.06% at fundamental frequency 50Hz.

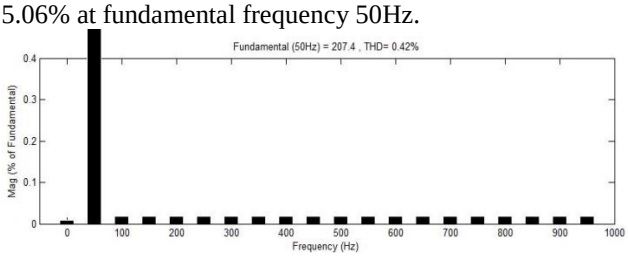

Fig. 21 THD of source voltage

Fig. 21 shows the source voltage total harmonic distortion of 0.42% at fundamental frequency 50Hz.

Conclusion

Here overview of DVR and UPFC is presented. In order to investigate the impact of UPFC on power systems effectively, it is essential to formulate their correct and appropriate model. In the area of power flow analysis models of the UPFC have been studied and UPFC compensates the voltage disturbances.DVR is an effective custom power device for voltage sags and swells mitigation. The impact of voltage sags on sensitive equipment is severe. Therefore, DVR is considered to be an efficient solution due to its relatively low cost and small size, also it has a fast dynamic response. The simulation results show clearly the performance of a DVR in mitigating voltage sags and swells. The DVR handles both balanced and unbalanced situations without any difficulties and injects the appropriate voltage component to correct rapidly any anomaly in the supply voltage to keep the load voltage balanced and constant at the nominal value. In this paper the performance of unified power flow controller also investigated in controlling the flow of power over the transmission line. Voltage sources model is utilized to study the behavior of the UPFC in regulating the active, reactive power and voltage profile.

References

Usha Rani P, Rajkumar M and Dr. S. Rama Reddy (2011) Voltage sag/swell compensation using Z-Source inverter based Dynamic voltage Restorer'' *Proceedings of ICETECT.*

Choi S. S, Li B. H, and Vilathgamuwa D. M (2000) Dynamic voltage restoration with minimum energy injection, *IEEE Trans. Power Systems,* vol. 15, pp. 51-57.

Gajanayake C. J, Vilathgamuwa D. M, and Loh P. C (2005) Small signal and signal-flow-graph modeling of switched Z-source impedance network, *IEEE Power Electronics Letters*, vol. 3, pp. 111-116.

Jimichi T, Fujita H., and Akagi H. (2005) Design and experimentation of a dynamic voltage restorer capable of significantly reducing an energy storage element, in Conf. Record Industry Applications Conference,*14th IAS Annual Meeting*.

Loh P. C, Vilathgamuwa D. M, Lai Y. S, Chua G. T, and Li Y (2004) Pulse-width modulation of Z-source inverters, in *Conf. Record IEEE Industry Applications Conference, 39th IAS Annual Meeting*.

Peng F. Z. (2003) Z-source inverter, *IEEE Trans. Industry Applications*, vol.39, pp. 504-510.

Sira-Ramirez H and Ortega R (1995) Passivity-based controllers for the stabilization of DC-to-DC power converters, in *Proc. 34th IEEE Conference on Decision and Control.*

Sng E. K. K, Choi S. S, and Vilathgamuwa D. M (2004) Analysis of series compensation and DC-link voltage controls of a transformer less self charging dynamic voltage restorer, *IEEE Trans. Power Delivery*, vol.19, pp. 1511-1518.

Torabzad S, Babaei E, Kalantari M (2010) Z-Source Inverter based Dynamic Voltage Restorer 1st Power Electronic & Drive Systems & Technologies Conference.

Woodley N. H, Morgan L, and Sundaram A (1999) Experience with an inverter-based dynamic voltage restorer, IEEE Trans. Power Delivery, vol. 14, pp. 1181-1186.

Authors Profile

1. **B.Sharath Kumar**, PG scholar from Anurag Group of Institutions, hyderabad, received B.Tech(EEE) from Christu Jyoti Institute of Technology and Sciences in 2010, warangal. His area of Interests are Control systems, Power Systems, FACTS.

2. **MD.Yaseen** received his M.Tech (Power Systems & Automation) from GITAM University, Vishakapatnam in 2010 and B.Tech(EEE) from Adams Engineering College,Palvancha, Khammam Dist in 2008. Presently working as Assistant Professor (EEE Dept) in **Anurag Group of Institutions**,**Hyderabad.** His area of Interests are Power Systems, Power Quality and FACTS.