International Journal of Current Engineering and Technology
ISSN 2277 - 4106

Available at http://inpressco.com/category/ijcet

Research Article

Review Paper on Performance Improvement of WiMAX using Coding Techniques

Harmeet Kaur[a*] and Jyoti Saini[a]

[a]ECE department, KITM, Kurukshetra, Haryana, India

Accepted 02 August 2013, Available online 01 October 2013, **Vol.3, No.4 (October 2013)**

Abstract

In this paper, I present the review of the convolution coding (CC) and Turbo code based on mobile WiMAX system. The WiMAX technology based on standard 802-16 wireless MAN is configured in the same way as a traditional cellular network with base stations using point to multipoint architecture to drive a service over a radius up to several kilometers. The range and the Non Line of Sight (NLOS) ability of WiMAX make the system very attractive for users, but there will be slightly higher BER at low SNR. Coding is a technique where redundancy is added to original bit sequence to increase the reliability of the communication. WIMAX transmit data with low bit error rate in the noisy environment by apply Forward Error Correction method with different coding techniques. This method is useful to reduce the bit error rate (BER) and increase the efficiency.

Keywords: *WiMAX, Coding Techniques etc.*

1. Introduction

WiMAX (Worldwide Interoperability for Microwave Access) is a wireless communications standard designed to provide 30 to 40 megabit-per-second data rates, with the 2011 update providing up to 1 Gbit/s for fixed stations. The name "WiMAX" was created by the WiMAX Forum, which was formed in June 2001 to promote conformity and interoperability of the standard. The forum describes WiMAX as "a standards-based technology enabling the delivery of last mile wireless broadband access as an alternative to cable and DSL". WiMAX refers to interoperable implementations of the IEEE 802.16 family of wireless-networks standards ratified by the WiMAX Forum.WiMAX Forum certification allows vendors to sell fixed or mobile products as WiMAX certified, thus ensuring a level of interoperability with other certified products, as long as they fit the same profile. WiMAX is called the next generation broadband wireless technology which offers high speed, secure, sophisticate and last mile broadband services. The evolution of WiMAX began a few years ago when scientists and engineers felt the need of having a wireless Internet access and other broadband services which works well everywhere especially the rural areas or in those areas where it is hard to establish wired infrastructure and economically not feasible. IEEE 802.16, also known as IEEE Wireless-MAN, explored both licensed and unlicensed band of 2-66 GHz which is standard of fixed wireless broadband and included mobile broadband application

The objective of this paper is to provide review of the WiMAX. WIMAX transmit data with low bit error rate in the noisy environment for that we apply Forward Error Correction method with different coding techniques. This method is useful to reduce the bit error rate (BER) and increase the efficiency.

A. Features of WiMAX

i)Interoperability**:**The IEEE 802.16 standard is internationally accepted and the standard is maintained and certified by WiMAX forum covers fixed, portable and mobile deployments and giving the user the freedom to choose their product from different certified vendors and use it in different fixed, portable or mobile networks.
ii) Long Range :It covers up to 30 miles but in practice, it covers only 6 miles. Mobile WiMAX, can support both LOS and NLOS connections. For that, it must meet the condition of the range for LOS, 50 kilometres and for NLOS, 10 kilometres.
iii)QoS:QoS of WiMAX media access control (MAC) is designed to support a large number of users, with multiple connections per terminal, each with its own QoS requirement.
iv)Mobility**:** WiMAX offers immense mobility especially IEEE 802.16e-2005 as it adopted SOFDMA (Scalable Orthogonal Frequency Division Multiple Access) as a modulation technique and MIMO (Multiple Input Multiple Output) in its physical layer. The mobileWiMAX variant

*Corresponding author: Harmeet Kaur

of the system has mechanisms to support secure seamless handovers and also power-saving mechanisms that extend the battery life of handheld subscriber devices.

v)Security:WiMAX have a robust privacy and key management protocol as it uses Advanced Encryption Standard (AES) which provides robust encryption policy. It also supports flexible authentication architecture which is based on Extensible Authentication Protocol (EAP) which allows variety of subscriber credentials including subscriber's username and password, digital certificates and cards.

2. WIMAX v/s Wi-Fi

WiMAX occupies a somewhat middle ground between Wi-Fi and 3G technologies when compared in the key dimensions of data rate, coverage, QoS, mobility, and price. WiMAX is a high-speed wireless packet-based radio connectivity for metropolitan area wireless standard that provides wireless broadband connections similar to WI-Fi but with much coverage of up to 50 kilometers in LOS and 10 kilometers in NLOS condition.(Mohamed A. Mohamed *et al*, 2010).

3. IEEE 802.16WIMAX standards

The IEEE standard committee introduced standards for networking elements, for an instance, IEEE 802.16 in 1999. The 802.16 family standard is called Wireless Metropolitan Area Network (MAN) commercially known as WiMAX which is an industry-led, non-profit organization and responsible for testing, certificating and promoting interoperable wireless products based on IEEE 802.16 working group and ETSI's HiperMAN standard. The original IEEE standard addressed 10 to 66 GHz in licensed bands and 2 to 11 GHz in unlicensed frequency range. Currently, WiMAX has two main variations: one is for fixed wireless applications (covered by IEEE 802.16-2004 standard) and another is for mobile wireless services (covered by 802.16e standard). Both of them are evolved from IEEE802.16 and IEEE 802.16a, the earlier versions of WMAN standards. The basic characteristics of the various IEEE 802.16 standards are summarized in Table 1(R.B. Marks *et al*, 2004).

The 802.16 standards only specify the PHY layer and MAC layer of air interface while the upper layers are not considered. IEEE 802.16 suite of standards (IEEE 802.16-2004/IEEE 802-16e-2005) defines within its scope four PHY layers, any of which can be used with the media access control (MAC) layer to develop a broadband wireless system.The PHY layers are defined in IEEE 802.16 are: (i) WMANSC: a single carrier PHY layer intended for frequencies beyond 11GHz requiring a LoS condition; (ii) WMANSCa: a single carrier PHY for frequencies between 2GHz and11GHz for point–to–multipoint operations; (iii) WMAN OFDM: a 256–point FFT–based OFDM- PHY layer for point–to–multipoint operations in NLoS conditions at frequencies between 2GHz and 11GHz; (iv) WMAN OFDMA: a 2,048- point FFT–based OFDMA-PHY for point–to–multipoint operations in NLoS conditions at frequencies between 2GHz and 11GHz. In the IEEE 802.16e–2005, this layer has been modified to scalable OFDMA, where the FFT size is variable and can take any one of the following values: 128, 512,1,024, and 2,048 (R.B. Marks *et al*, 2004).The variable FFT size allows for optimum operation/ implementation of the system over a wide range of channel bandwidths and radio conditions; this PHY layer has been accepted by WiMAX for mobile and portable operations and is also referred to as mobile WiMAX(R.B. Marks *et al*, 2004).

Table1. Basic data on IEEE 802.16 standards

	802.16	**802.16-2004**	**802.16e-2005**
Date	Dec.2001	June-04	Dec. 2005
Spectrum	10-66GHz	2-11 GHz	2-6 GHz
Operation	LoS	LoS &NLos	NLoS
Bit Rate	35-134 Mbps	Upto 75 Mbps	Upto 15 Mbps
Channel BW	28 MHz	20 MHz	5 MHz

4. WIMAX Transmitter

The data from the source is randomized and afterwards, coded and mapped into QAM symbols. The functional blocks that compose the transmitter of the WiMAX is depicted in Figure2 (Prabhakar Telagarapu K.Chiranjeevi, 2011).This PHY layer uses orthogonal frequency division multiplexing (OFDM) with 256 subcarriers. Each OFDM symbol is composed of 192 data subcarriers, 1 zero DC subcarrier, 8 pilot subcarriers, and 55 guard carriers. After the assembling process, zero padding is performed.

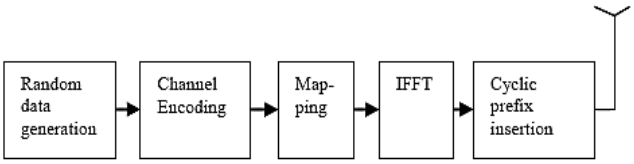

Figure1. WiMAX Transmitter Section

The signal is converted to the time domain by means of the inverse fast Fourier transform (IFFT) algorithm and finally, a cyclic prefix (CP) with the aim of preventing inter-symbol interference is added.

5. WIMAX Receiver

The receiver basically performs the reverse operation as

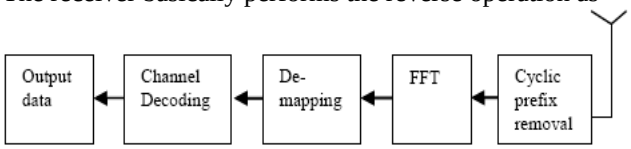

Figure2.WiMAX Receiver Section

the transmitter as well as channel estimation necessary to reveal the unknown channel coefficients. The block diagram for receiver is as shown in figure2 (Prabhakar Telagarapu K.Chiranjeevi, 2011).

Firstly, the CP is removed and the received signal is converted to the frequency domain using, in this case, the FFT algorithm. As we already know that an OFDM symbol is composed by data, pilots , a zero DC subcarrier, and some guard bands. Thus, a process to separate all these subcarriers is needed. First, the guard bands are removed, and then, a disassembling is performed to obtain pilots, data, and trainings. The training is used in the channel estimator, which calculates the channel coefficients. The estimated channel coefficients can be used in the demapper to perform an equalization of the data and compensate the frequency selective fading of the multipath propagation channel. Once the data has been demapped, it enters the decoder to recover the originally transmitted signal.

6. Convolution Code (cc)

In the Mobile Wi-Max OFDMA part, the CC is the only mandatory coding scheme. Its computations depend not only on the current set of input symbols but on some of the previous input symbols. A trellis description is used for convolution encoding which gives relation how each possible input to the encoder influences the output in shift register. It uses the Viterbi algorithm for decoding. In communication, a convolution code is a type of error-correcting code in which

• Each m-bit information symbol (each m-bit string) to be encoded is transformed into an n-bit symbol, where m/n is the code rate ($n \geq m$) and

• The transformation is a function of the last k information symbols, where k is the constraint length of the code.

• There are three parameters which define the convolotional code(Harpreet Singh; Kumar,2013).

(a) Rate: Ratio of the number of input bits to the number of output bits. In this example, rate is 1/3 which means there are two output bits for each input bit.

(b) Constraint length: The number of delay elements in the convolutional coding. In this example, with there are two delaying elements.

(c) Generator polynomial: Wiring of the input sequence with the delay elements to form the output. In this example,

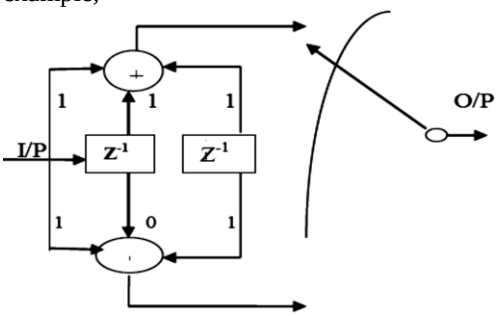

Figure3.Convolutional code with rate 1/2, K=1/3, generator polynomial [7,5] octal

generator polynomial is $[7,5]_8$=$[111,101]_2$.The output from the $7_8 = 111_2$ arm uses the XOR of the current input, previous input and the previous to previous input. The output from the $5_8 = 101_2$ uses the XOR of the current input and the previous to previous input.

rate=1/2

constraint length, k=3

generator polynomial l$[7,5]_8 = [111,101]_2$

7. Turbo Codes

Turbo codes are provided as an optional channel coding scheme in IEEE 802.16 standard. A turbo code is formed from the parallel concatenation of two constituent codes separated by an interleaver (CTC) (Vinit Grewal; K Sharma ,2011) Each constituent code may be any type of FEC code used for conventional data communications. A generic structure for generating turbo codes is shown in Figure2.As can be seen, the turbo code consists of two identical constituent encoders, denoted as I and II. The input data stream and the parity outputs of the two parallel encoders are then serialized into a single turbo code word. by using an interleaver, the data $\{Xi\}$ is rearranged so that the second encoder receives it in a different order, denoted{Xi'}.[10]

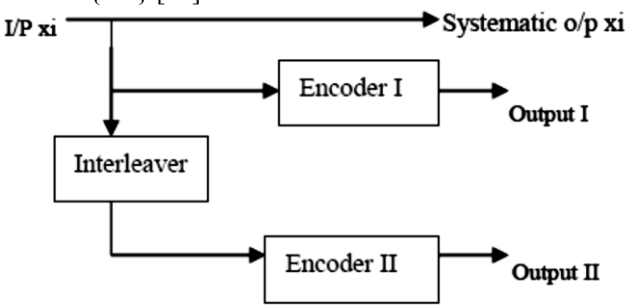

Figure4.A generic Turbo Encoder

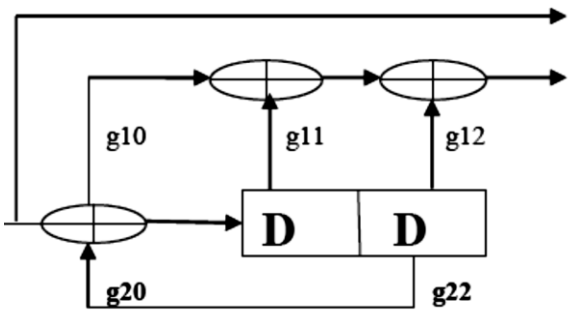

Figure5. Recursive systematic encoder

We can regard the turbo code as a large block code. The performance depends on the weight distribution not only the minimum distance but the number of words with low weight. Therefore, we want input patterns giving low weight words from the first encoder to be interleaved to patterns giving words with high weight for the second encoder. The trick is to use the codes in their recursive systematic form where we divide with one of the generator vectors. The example gives (1,G2/G1)= (1,(1+D+D2)/(1+D2). This operation does not change the

set of encoded sequences, but the mapping of input sequences to output sequences is different. The code is the same, meaning that the distance properties are unchanged, but the encoding is different.

The output sequence we got from the feed-forward encoder with a single 1 is now obtained with the input 1+D2=G1. With the recursive systematic encoders we have a inter- leaver where information patterns giving low weight words from the first encoder are interleaved to patterns giving words with high weight from the second encoder. The most critical input patterns are now patterns of weight 2. For the example code the information sequence ...01010... will give an output of weight 5.The bit error rate (BER) after decoding of a systematic code can not exceed the BER on the channel.

Conclusion

Designing a channel code is always a tradeoff between energy efficiency and bandwidth efficiency. Codes with lower rate can usually correct more errors. If more errors can be corrected, the communication system can operate with a lower transmit power, transmit over longer distances, tolerate more interference, use smaller antennas and transmit at a higher data rate. These properties make the code energy efficient. On the other hand, low-rate codes have a large overhead and are hence more heavy on bandwidth consumption. Also, decoding complexity grows exponentially with code length, and long codes set high computational requirements to conventional decoders. Hence, new codes were sought that would allow for easier decoding. The task of the decoder easier is using a code with mostly high-weight code words.Error detection and correction techniques are essential for reliable communication over a noisy channel. In this paper, Turbo coding and convolution coding method have been. The Turbo coding method leads to reduce BER as compare to convolution coding method.

References

http://en.wikipedia.org/wiki/WIMAX.

R.B. Marks, K. Stanwood, D. Chang, *et al*. (October, 2004), *IEEE Standard for Local and Metropolitan Area Networks, Part 16*: Air Interface for Fixed Broadband Wireless Access Systems.

Jyoti, Jagdev Singh Kainth, Paramdeep Singh (April 2013),Performance Improvement by RS Encoding for Different Modulation Techniques used in WiMAX , *International Journal of Emerging Technology and Advanced Engineering*, Volume 3, Issue 4.

http://en.wikipedia.org/wiki/Convolutional_code.

Prabhakar Telagarapu, Prabhakar Telagarapu, K.Chiranjeevi, (May 2011),Analysis of Coding Techniques in WiMAX, *International Journal of Computer Applications* ,Volume 22–No.3.

Harpreet Singh Bedi, Gurpreet Singh,Tarundeep Singh, Navdeep Kumar, (Jan 2013),Overview of Performance of Coding Techniques in Mobile WiMAX Based System" *International Journal on Recent and Innovation Trends in Computing and Communication*,Volume: 1 Issue: 1.

Mohamed A. Mohamed,Mohamed S. Abo-El-Seoud and Heba M. Abd-El-Atty (2010) ,Performance Simulation of IEEE 802.16e WiMAX Physical Layer.

www.coe.montana.edu/ee/rwolff/ee548/.../turbocodes/turbotutorial.pdf

Vinit Grewal, Ajay K Sharma (June, 2011),On Performance Enhancements of WiMax PHY Layer with Turbo Coding for Mobile Environments , *International Journal of Advanced Science and Technology*, Vol..31.

www.csee.wvu.edu/~mvalenti/documents/DOWLA-CH12.pdf