International Journal of Current Engineering and Technology
ISSN 2277 - 4106

Available at http://inpressco.com/category/ijcet

Research Article

Effect of Luminaries and Heat Sink on the Performance of PV Powered HPLED Lighting for Indoor Applications

Sreedevi Sanjeev Nair[a*] and Mini Rajeev[b]

[a]Department of Electonics and Telecommunication Engineering, Faculty of Fr.Conceiou Rodrigues Institute of Technology, University of Mumbai,Maharashtra,India.
[b]Department of Electrical Engineering, Faculty of Fr.Conceiou Rodrigues Institute of Technology, University of Mumbai,Maharashtra,India..

Accepted 10 March 2013, Available online 1June 2013, **Vol.3, No.2 (June 2013)**

Abstract

High power Light Emitting Diodes (HPLEDS) are adopted for lighting purpose, making them the fastest growing light source worldwide. This paper discusses HPLED lamp of various shapes with different lux levels and different heat sink requirements when used for indoor lighting. To provide constant current to LED, a driver circuit is designed using a dc to dc converter and a microcontroller. The input of the converter is a 24V battery which is charged from a photo voltaic panel. To verify the design of the driver circuit, the circuit was simulated in Proteus software. Besides simulation, laboratory prototype of 8W LED lamp of different shapes are constructed, tested and the results are presented here. .

Keywords: *HPLED,driver,PIC16F877A,battery,boost converter,buck converter,solar panel,luminaires,heat sink,lux.*

1. Introduction

In order to face the growing concerns about conventional energy sources, we need to increase our dependence on energy efficient systems. As electric lighting is a major electricity consumer, good amount of energy can be saved by energy efficient lighting. Energy efficient lighting needs an energy efficient light source, effective control and careful luminaire design. Compared to traditional light sources such as incandescent lamps, metal halide lamps, fluorescent lamps etc, LED lamp is considered to be more energy efficient and environment friendly(L.Y.Chin et al 2012).

Luminaries is defined as the complete lighting unit, consisting of one or more lamps, along with the socket and other parts that hold the lamp in place and protect it, wiring that connects the lamp to a power source, and a reflector that helps direct and distribute the light . The design constraints that affect the performance of HPLED lighting system are thermal management, the distance between the light and the area to be illuminated, uniform light distribution etc. LED's do not emit heat as infrared radiation like incandescent lamps. The primary cause of LED lumen depreciation is heat generated at the LED junction. During operation, HPLEDs produce high temperature and hence to enhance the life of LEDs, a proper thermal management strategy is necessary (M.O.Holcomb,et al,2003).

*Corresponding author: Sreedevi Sanjeev Nair

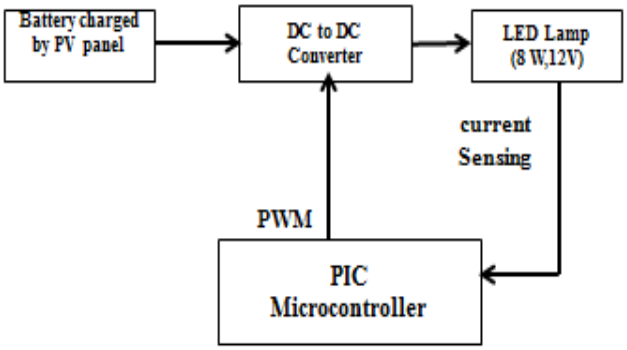

Fig. 1 Block diagram of the system

The block diagram of the system implemented is shown in Fig.1.The components typically used in PV powered HPLED lighting system include PV panel, battery, LED driver circuit, HPLED lamp as well as the luminaire. This paper deals with the design, construction and testing of 8W HPLED lamps of various shapes and sizes for indoor lighting. The round, rod and square shaped HPLED lamps were tested with different types of reflector glasses and results are presented in the paper. The design of driver circuit for HPLED lamp using a dc to dc converter controlled by a microcontroller is also discussed.

2. HPLED driver circuit

A small change in forward voltage of LED produces large change in forward current. If the current is not limited, heat generated at the junction leads to failure of LED. By

driving LED with regulated constant current, the light output variation and issues related to voltage variation can be eliminated. Hence a driver circuit is necessary A dc to dc converter is the heart of the driver circuit. Here a buck converter is used because battery voltage is 24V and lamp voltage is 12V. MOSFET is selected as the switching device of the converter to provide switching frequency of 25kHz. The equations and designed values of inductance (L) and capacitance (C) for the buck converter are given in Table.I.

Table I. Values of L and C for buck converter.

Parameter	Equation	Value
L	$\frac{(1-D)T_s R}{2}$	1mH
C	$\frac{T_s^2(1-D)V_o}{8\Delta V_o L}$	25µF

Here, D is the duty cycle, T_s is the switching time period, R is the load resistance, V_o is the output voltage, ΔV_o is the peak to peak ripple in the output voltage of the buck converter (L.Umanand,1992).LED current is sensed and given to the microcontroller, PIC 16F877A. The microcontroller PIC16F877A is chosen as it has inbuilt PWM outputs and has an ADC circuit. The microcontroller generates PWM signals and this PWM output is fed to the MOSFET in the buck converter.

3. Luminairies and Heat sink

If proper luminaires are chosen for the HPLED lighting system, the number of LEDs required can be greatly reduced. This reduces hardware costs as well as electrical power consumption. Lenses that are used with LEDs are effective in directing the light beam which also increases the intensity of light at the desired location. Hence reflectors are not necessary unlike other traditional light sources. The maximum light output requires maximum current, but minimum temperature. Hence for achieving minimum temperature, at maximum current, perfect cooling system is necessary(B.Witzen,2010).Hence proper design of heat sink is a matter of concern.

A larger surface area can be obtained for heat sinks by using fins, increasing the size of the heat sink itself or changing its orientation. When using a flat-plate heat sink that relies more on the radiation heat transfer mode, painting the surface can have a dramatic effect on getting the heat out. The final size and shape of the heat sink will depend on many variables, such as orientation, fin size, ambient air temperature, air flow speed and direction, proximity of other heat sources and the availability of lower temperature air to circulate through the enclosure (S.Lee,2011).

Fig 2 8W LED lamp of various shapes

In this paper, 8Watt HPLED lamp consisting of two strings of four 1 Watt LED's connected in series working at a voltage of 12V is used. The luminaire for the above circuit has been implemented in three different shapes. In the round shape lamp of 314 cm^2 area, silver colored heat sink of area 16.2cm^2 with 25 fins and height of 1inch was used. The LED's are arranged in the circular pattern where they tend to emit light in the concentrated form. The rod shaped lamp of 20.86''*6.10'' inches uses designed black colored heat sink of area 16.2cm^2 with 25 fins and height of 1inch was implemented with all LED's aligned in a single row so as to get a distributed type of light emission.

The square type of construction with a heat sink (aluminum metal of of 3.93''*0.78'' inches) has eight 1Watt LED's arranged in a 3*3 matrix to get a spot light type of emission. The different types of lamps constructed are shown in Fig 2.

4. Simulation

To verify the design, simulation of the driver circuit is done in Protues software and the simulation model is shown in Fig.3.In order to make the intensity of the LED lamp light constant, current is sensed and compared with reference using OPAMPs which will be given as the inputs to the PIC controller to generate the required PWM.

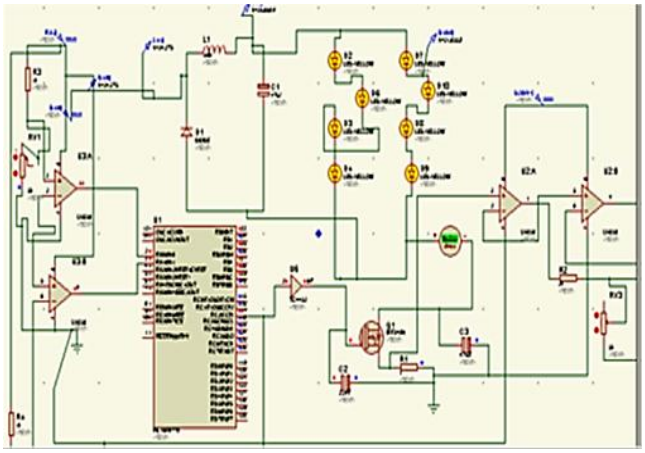

Fig. 3 Simulation of HPLED lamp driver circuit

The PIC16F877A controller was selected for the simulation in Proteus software. Opamps were used as comparators. The code was written in MikroC software to generate the PWM output. The code is written in such a way that if the intensity of the lamp decreases in comparison with the reference then the duty cycle will be increased while if the intensity matches the set value, the duty cycle will remain unchanged. The reference value of

current is 0.66mA was considered for the connection of two parallel strings consists of four LED's in series. The PWM output of the simulated circuit is shown in Fig.4.It was observed in simulation that the intensity of LED lamps were constant.

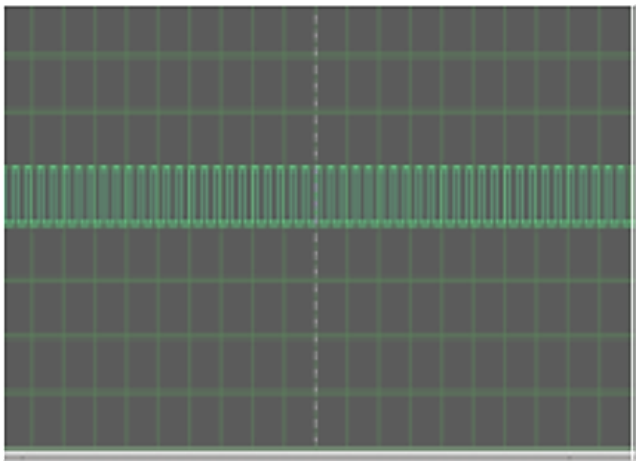

Fig. 4 PWM output

5. Hardware Implementation

A 8W HPLED lighting system has been set up, and the topology and parameters of the main circuit is the same as the simulation model shown in Fig.5. The code for PWM program has been written in MikroC which was burnt into the PIC16F877A to generate the pulses. This output from the PIC controller circuit is fed through the buffer to the gate of the MOSFET switch of the buck converter.

In the feedback loop, to measure the current of LED lamp, a 1Ω resistor is used to get the corresponding voltage drop. The measured voltage value being insufficient has to be amplified with the help of the amplifier. To avoid the loading effect on the MOSFET, buffer amplifier has been also provided for stability. The comparator will select RA_o pin or RA_1 pin of the PIC controller depending on the value of current measured. The OPAMP LM358 has been selected to function as comparator and buffer in the implementation.

The temperature of the heat sinks used in conjunction with LED's were measured using digital IC,DS18B20.The temperature of heat sinks used in the round shaped lamp, rod shaped lamp and the square shaped lamp taken at different time intervals are shown in Table II, Table III and Table IV respectively. The lamps were tested with different types of reflector glasses and heat sink arrangements. The total cost incurred in the making of this circuit has been Rs.1000 approximately where the luminaries, high power LED's, PIC controller contributed to the major cost.

The full hardware set up of PV powered HPLED round shaped lamp is shown in Fig.6.For maximum power tracking, a dc to dc converter is used after the PV panel. This dc to dc converter is controlled by another PIC controller. Two numbers of 33Ah, 12V lead acid batteries were used for the implementation of the entire circuit.

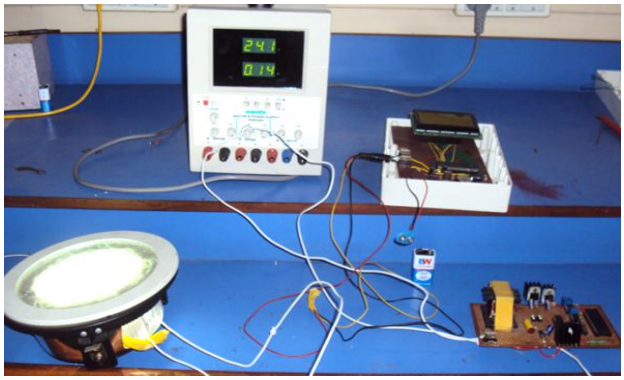

Fig 5. Hardware set up of HPLED lamp and its driver circuit

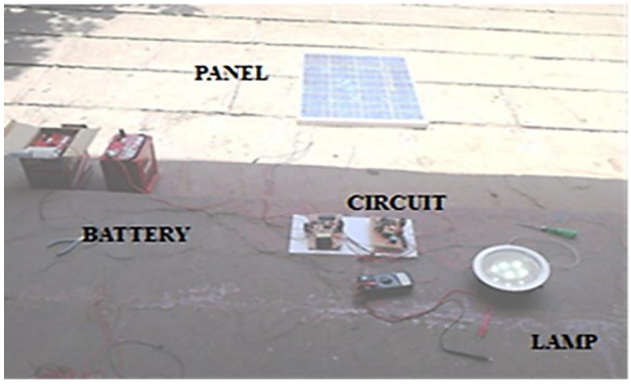

Fig 6. Full hardware set

TABLE II Heat Sink temperature in round shaped lamp

Time(p.m.)	Temperature(oC)
11.50 a.m.	36.1
12.00	36.5
12.15	36.7
12.3	36.9
12.45	37
1.0	37.2
1.1	37.6
1.2	37.8
1.3	37.9
1.4	40.2
1.5	40.4
2:0	40.9
2.15	41.5

It was observed that the temperature of the heat sink used with square shaped lamp, is largest as compared to other designed lamps. The lux levels recorded for the different types of the lamp with lux meter is given in Table V and is plotted in Fig.7.The lux levels for the round shaped lamp with no frost glass has recorded maximum lux as

compared to the other lamps with frost glass as frost glass are opaque but still translucent. The blurred glass allows light to pass through but it prevents you from seeing the other side. Depending on the amount of lux levels required for different application we can have various shapes of the luminaries designed according to indoor lighting requirements.

TABLE III Heat Sink temperature in rod shaped lamp

Time(p.m.)	Temperature(^{o} C)
2.0	36.5
2.15	36.7
2.3	36.9
2.45	37
3.0	37.2
3.1	37.6
3.2	37.8
3.3	37.9
3.4	40.2
3.5	40.4
4.0	40.9
4.15	41.5

TABLE IV Heat Sink temperature in square shaped lamp

Time(p.m.)	Temperature(^{o}C)
5.0	42.5
5.15	43.7
5.3	44.6
5.45	45.1
6.0	46.2
6.15	46.8
6.3	47.2
6.45	48.1
7.0	48.5
7.15	48.8
7.3	49.1
7.45	49.3

TABLE. V Lux levels recorded for different shapes of lamp

Height(feet)	Rod	Round	Round(Frost glass)	Square
1	340	600	310	430
2	230	490	270	330
3	120	330	150	210
4	100	220	120	130
5	50	100	80	70
6	40	70	60	70
7	20	30	30	30

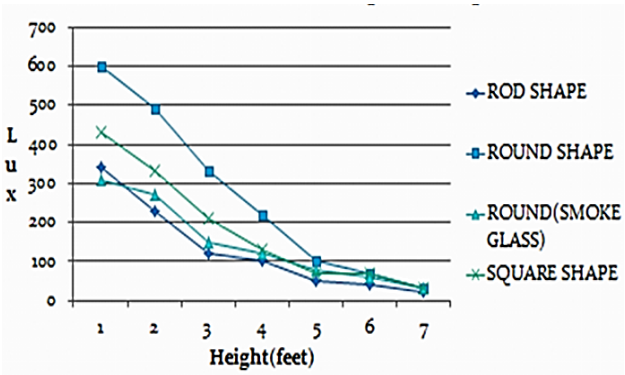

Fig 7. Plot of lux levels versus height

Conclusions

In order to meet the requirements of indoor lighting, a laboratory prototype of PV powered HPLED lamp of different shapes such as round, rod and square were designed, constructed and tested. Suitable driver circuit was implemented to provide constant current to HPLEDs. Temperature and lux levels of different lamps are compared and it was observed that temperature was highest in the square shaped lamp and lux level was highest in the round shaped one. Based on this study, proper luminaries for the lamp can be chosen and proper heat sink can be selected for the HPLED lamp for its efficient utilization depending on the application.

References

Le-Yan Chin and Kok- Keong Chong (March 2012), Study of high power light emitting diode (LED) lighting system in accelerating the growth rate of Lactuca sativa for indoor cultivation, *International Journal of Physical Sciences* Vol. 7(11), pp. 1773 – 1781.

Mari Ochiai Holcomb, Regina Mueller-Mach, Gerd O. Mueller,Dave Collins, Robert M. Fletcher, Daniel A. Steigerwald, et al, (2003),The LED lightbulb: are we there yet? Progress and challenges for solid state illumination, in *IEEE Conference on Lasers and Electro-Optics*, Taipei, China

JP Benner (sep 1999), Photovoltaics gaining greater visibility *IEEE Spectrum*, Vol.36, Issue 9, pp. 34-42.

www.led-professional.com

Brian Witzen (2010), Thermal Management for Sharp's Mini-Zenigata LED Modules, *Sharp Microelectronics of the Americas*

L.Umanand,S.R.Bhat (1992),Design of magnetic Components for Switched Mode power converters,2nd ed., vol. 2. India, pp.82–85.

Seri Lee (2008), How to select a heatsink, Aavid Thermalloy.

E. I and O. Rivera (2008), Maximum Power Point Tracking using the Optimal Duty Ratio for DC-DC Converters and Load Matching in Photovoltaic Applications, *IEEE*, pp. 987-991

R.W. Erickson, D. Maksimovic (2001), Fundamentals of Power Electronics, 2nd ed., *Kluwer Academic Publishers*.