International Journal of Current Engineering and Technology
ISSN 2277 - 4106

Available at http://inpressco.com/category/ijcet

Research Article

Effect of Residual Stress of Different Materials on Performance of Chevron Beam Actuator

Neha Jain[a*], Dinesh Arora[a] and Sandeep Kumar[a]

[a]Department of Electronics and Communication Engineering, SDDIET, Barwala, Panchkula, India.

Accepted 2 Jan. 2013, Available online 1 March 2013, **Vol.3, No.1 (March 2013)**

Abstract

This paper reports the effect of residual stress of different materials on displacement of the actuator. This study has been done by designing and simulating the microactuator using COMSOL Multiphysics 4.2a. The behaviour of the microactuator is studied for different materials like polysilicon, gold, nickel, copper and argentum at an applied potential difference of 4V between the contact pads.

Keywords: *MEMS, Actuators, Electrothermal, Chevron, Residual Stress.*

1. Introduction

MEMS refers to the term Micro Electro Mechanical System. MEMS consists of mechanical structures, microsensors, microactuators and microelectronics. Application of MEMS exist in biomedical and biological fields, diagnostics, drug delivery, tissue engineering, microassembly of microelectronics, information technology etc (J K Luo et.al, 2005). Microactuators convert electrical input to mechanical form (Prime Faraday, 2002). Popular drive mechanisms for actuation are piezoelectric, electrostatic, shape memory and electrothermal. Electrostatic materials have the disadvantage that they cannot produce large displacement and force. Piezoelectric actuators require high voltages of up to hundreds of volts, hence unsuitable for biological applications. SM (shape memory) based actuators are inefficient in their working (J K Luo et.al, 2005). Electrothermal actuators have the advantage that they can produce large displacement and forces but at the cost of higher power consumption (Moultan et.al, 2001). Actuators enable MEMS to perform physical functions. They are the point at which energy is converted into force and motion (Aziz et.al, 2011).

Unlike asymmetric actuators based on non-uniform joule heating, a bent chevron beam actuator provides a scalable force along with displacement confined in one dimension (Rawashdeh et.al, 2012). A bent beam thermal actuator uses its shape to enhance the thermal expansion of its beams. Heat required for actuation is generated by electrical resistive heating (Alex et.al, 2012). The performance of a conventional chevron actuator is limited by high temperature expansion of the beams that is confined near the shuttle. It is degraded by the thermal expansion of the long shuttle that connects the apexes of the beam (Alex et.al, 2012).

Residual stresses are induced in the structures when thin films are deposited on substrate. Since the deposition of layer is done at elevated temperature, a stress is introduced when fabricated structures are brought back to the room temperature. These residual stresses are due to the difference in the coefficient of thermal expansion between two layers. For a beam fixed at one end and free at the other, let there is a residual stress in the axial direction. This beam will simply stretch or contract depending on whether the stress is compressive (negative) or tensile (positive). In the present work, the effect of compressive residual stress on displacement is analyzed (Ananthasuresh et.al, 2010).

In this paper, section 2 provides design concepts, section 3 gives design and simulation of chevron beam actuator, results are discussed in section 4 and section 5 concludes the paper.

2. Design concepts

Consider a conductor with a potential difference V applied across its ends causing a current I to flow through it, then its resistance and potential V are related as

$$V=IR \tag{2.1}$$

The power loss (rate of energy loss per unit time) in a resistor appears in the form of thermal energy and is given by

$$P=VI=I^2Ri \tag{2.2}$$

This power is also known as ohmic heating or Joule heating. Power results in heating of the structure which

* Corresponding author: Neha Jain

causes thermal expansion according to the equation 2.3. Hence there is elongation in the beam which produces deflection.

$$\Delta L = \alpha_E L \Delta T \tag{2.3}$$

where,
α_E = Thermal expansion coefficient
ΔT= Temperature difference

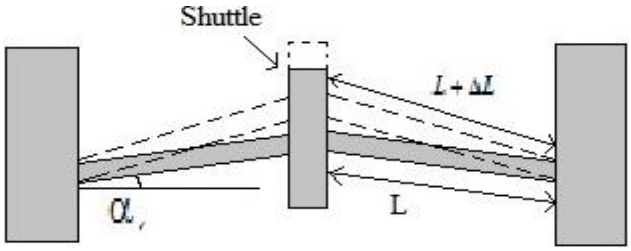

Figure 2.1: Chevron beam actuator

For a chevron beam actuator shown in figure 2.1 deflection of chevron beam actuator is given by following equation (Varona et.al, 2009):

$$Def_{chev} = [L^2 + 2L(\Delta L) - L^2 \cos^2(\alpha)]^{1/2} - L\sin(\alpha) \tag{2.4}$$

where,
L= Length of single beam
α = Pre-bending angle
ΔL = Elongation of the beam due to thermal expansion, where ΔL is given by equation 2.3
Stiffness of the shuttle with N number of beams is given by the following equation (Yongjun Lai et.al, 2004):

$$k_{CHV}=N192EI/(2L)^2 \tag{2.5}$$

where,
N=Number of beams
E= Young's modulus
L= Length of beam
I= Moment of Inertia, which is given by (Starman et.al, 2006)

$$I=tW^3/12 \tag{2.6}$$

where,

t= Thickness of beam in µm
w= Width of the beam in µm

3. Design and Simulation

Chevron beam actuator shown in figure 2.1 is modified in terms of number of beams. The modified design is shown in figure 3.1.

A simulation result for chevron beam actuator is shown in figure 3.2. Figure shows that as the voltage is applied between contact pads shuttle moves upward and shows a displacement.

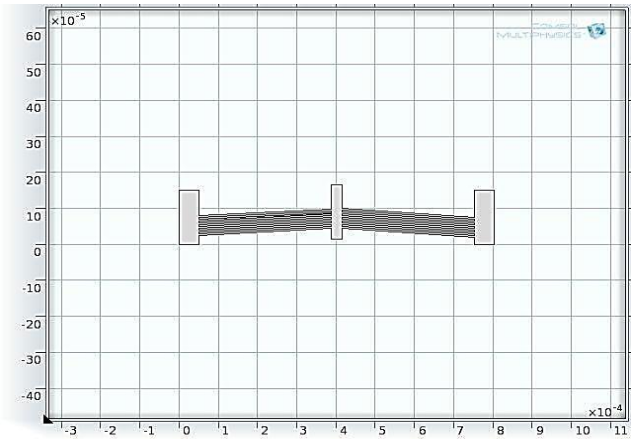

Figure 3.1: Modified Chevron Beam Actuator

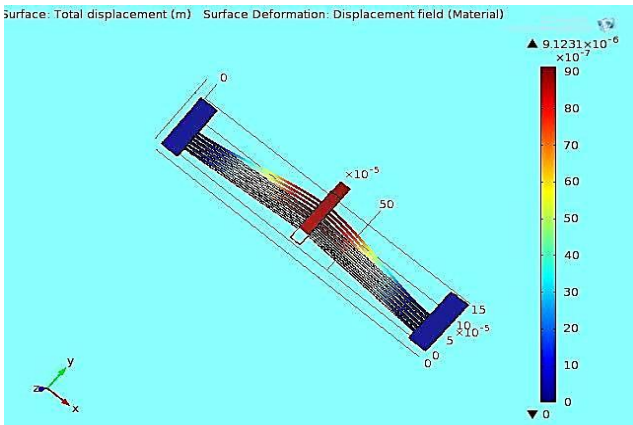

Figure 3.2: Displacement for Modified Chevron Beam Actuator

Material properties for different materials are given in table 3.1.

Table 3.1: Material properties (Aziz et.al, 2011)

Property	Polysilicon	Gold	Argentum	Cuprum	Nickel
Young's Modulus (GPa)	169	79	83	110	200
Poisson's ratio (µ)	0.22	0.44	0.37	0.34	0.31
Resistivity (nΩ-m)	23	22.14	15.87	16.78	69.3
Coefficient of Thermal Expansion (µm/mK)	2.9	14.2	18.9	16.5	13.4
Thermal conductivity (W/m*k)	150	318	429	401	90.9

In this paper, number of beams has been increased to six. This is because as the number of beams increases displacement of the actuator also increases. But this is followed up to six beams only. This can be explained in (Neha Jain et.al, 2012).

As the compressive residual stress increases, the displacement of the microtweezer also increases. In this work, residual stress in the range 50MPa to 350MPa is studied.

4. Results and Discussions

For fixed voltage, height and material properties, the displacement is proportional to the square of the beam length. This is given by equation 4.1 (J K Luo et.al, 2005):

$$\mu = \beta\alpha L^2 V^2 / 3k\rho d \qquad (4.1)$$

where,

μ is the displacement, coefficient β represents the difference in displacement for different actuators, α is thermal expansion coefficient, L is the length of the beam and V is the applied potential.

Effect of compressive residual stress on displacement for different materials has been studied. As the compressive stress is induced in the structure flexibility of the beams increases, hence displacement of the actuator also increases. This trend is followed for all the materials used here. This is evident in figure 3.4.

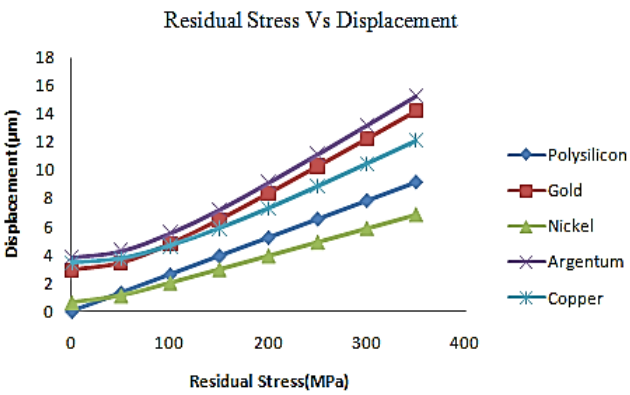

Figure 3.4: Residual Stress Versus Displacement for different materials

Figure 3.4 shows that out of all the materials, argentum has the highest displacement while nickel has the lowest displacement. Gold and argentum have approximately equal displacements at different residual stresses. Also, for all the materials as the compressive residual stress increases displacement increases.

5. Conclusion

This paper presents the effect of residual stress of different materials on the displacement of chevron beam microactuator. The presented paper concludes that out of materials like polysilicon, gold, nickel, argentum and copper, argentum has the highest displacement on the same residual stress effects whereas nickel has the lowest displacement. Microactuator is designed and simulated using COMSOL Multiphysics 4.2a.

References

J K Luo, A J Flewitt, S M Spearing, N A Fleck, and W I Milne (2005), Comparison of Microtweezers based on Three Lateral Thermal Actuator Configurations, *Journal of Micromechanics and Microengineering*, Vol 15, pp. 1294-1302.

Prime Faraday Partnership (2002), An Introduction to MEMS, *Standard Book, Loughborough University, Loughborough, UK.*

Timothy Moultan and G. K. Ananthasuresh (2001), Micromechanical Devices with Embedded Electro-Thermal-Compliant Actuation, *Sensors and Actuators A90*, pp. 38-48.

Ehab Rawashdeh, Ayman Karam and Ian G. Foulds (2012), Characterization of Kink Actuators as Compared to Traditional Chevron Shaped Bent-Beam Electrothermal Actuators, *Micromachines*, Vol. 3, pp. 542-549.

Alex Man Ho Kwan, Sichao Song, Xing Lu, Lei Lu, Ying-Khai Teh, Ying-Fei Teh,Eddie Wing, Cheung Chong, Yan Gao, William Hau, Fan Zeng, Man Wong, Chunmei Huang, Akira Taniyama, Yoshihide Makino, So Nishino, Toshiyuki Tsuchiya, and Osamu Tabata (June 2012), Improved Designs for an Electrothermal In-Plane Microactuator, *Journal of Micromechanical Systems*, Vol. 21, No. 3, pp. 586-595.

M.S. Suen, J.C. Hsien, K.C. Liu, David T.W. Lin (2011), Optimal Design of the Electrothermal V-Beam Microactuator Based on GA for Stress Concentration Analysis, *Proceedings of the International Multiconference of Engineers and Computer Scientists 2011 Vol II, IMECS*

Jorge Varona, Margarita Tecpoyotl-Torres, Anas A. Hamoui (2009), Design of MEMS vertical-horizontal chevron thermal actuators, *Sensors and Actuators A: Physical*, Vol. 153, pp. 127-130.

Yongjun Lai, James McDonald, Marek Kujath and Ted Hubbard, Force (2004), Deflection and power measurements of toggled microthermal actuators, *Journal of Micromechanics and Microengineering*, Vol. 14, pp. 49-56.

La Vern A. Starman, Derrick Langley, Stanley Rogers (2006), Micro-Shutter Developments for IR Applications, In Adaptive Coded Apertures Imaging and Non-imaging Sensors, Edited by David P. Casasent, Stanley Rogers, *Proceedings of SPIE* Vol. 7096.

J K Luo, A J Flewitt, S M Spearing, N A Fleck, and W I Milne (2005), Three types of planarstructure microspring electro thermal actuators with insulating beam constraints, *Journal of Micromechanics and Microengineering*, Vol. 15, pp. 1527-1535.

A.A. Aziz, M.S. Rehman, and Hasnizah Aris, Finite Element Analysis of a Lateral Micro-electrothermal Actuator, *RSM Proceedings*, pp. 354-358, 2011.

Leslie M Phinney, Matthew A Spletzer, Michael S Baker and Justin R Serrano (2010), Effects of mechanical stress on thermal microactuator performance, *Journal of Micromechanics and Microengineering*, Vol. 20, pp. 1-7.

Jay J. Khazaai, M. Haris M. Khir, Hongwei Qu, James Slicker (2010), Design and Fabrication of a Low Power Electro-thermal V-shape Actuator with Large Displacement, *NSTI-Nanotech*, Vol. 2, pp. 681-684.

Kristian Molhave and Ole Hansen (2005), Electro-thermally actuated microgrippers with integrated force-feedback, *Journal of Micromechanics and Microengineering*, Vol. 15, pp. 1265-1270.

Nilesh D Mankame and G K Ananthasuresh (2001), Comprehensive Thermal Modeling and Characterization of an Electro-thermal compliant Microactuator, *Journal of Micromechanics and Microengineering*, Vol. 11, pp. 452-462.

G.K. Ananthasuresh, K.J. Vinoy, S. Gopalakrishnan, K.N. Bhat, and V.K. Aatre (2010), MICRO & SMART SYSTEMS, Wiley India, 1st Edition, ISBN No. 978-81-265 -2715-1.

Neha Jain, Anurekha Sharma, Sandeep Kumar (Dec. 2012), Design and Simulation of Bidirectional In-Plane Chevron Beam Microtweezer, Vol. 2, (communicated).