International Journal of Current Engineering and Technology
ISSN 2277 - 4106

Available at http://inpressco.com/category/ijcet

Research Article

ANN Based Voltage Flicker Mitigation with DSTATCOM Using SRF Algorithm

Sujin P. R[a], T. Ruban Deva Prakash[b*], L. Padma Suresh[c]

[a] Noorul Islam University, Kumaracoil.
[b]MET'S School of Engineering, Mala
[c]Noorul Islam University, Kumaracoil.

Accepted 8 April 2012, Available online 1June 2012

Abstract

Human perception of light flicker is almost always the limiting criterion for controlling small voltage fluctuations. Voltage fluctuations in power systems can cause a number of harmful technical effects, resulting in disruption to production processes and substantial costs. But flicker, with its negative physiological results, can affect worker safety as well as productivity. The primary cause of voltage changes is the time variability of the reactive power component of fluctuating loads. The arc furnace is a major source of voltage flicker in industry. Recently, FACTS devices are effectively used for flicker mitigation. In this paper, voltage flicker mitigation with shunt compensator DSTATCOM is analyzed using the MATLAB software. The control strategy adopted to mitigate flicker plays a key role for effective mitigation. SRM algorithm is commonly used for harmonic filtering. This algorithm can be modified for voltage flicker mitigation. The computation is instantaneous but incurs time delays in filtering the DC quantities. In order to overcome this drawback, ANN based control algorithm for voltage flicker mitigation is also proposed in this paper. Since the controls do not include any parameter which is dependent on network condition, the performance of such controller is robust with respect to network structure, fault location and system loading. The control structure is decentralized and does not need any coordination with other compensating devices. The structure of proposed algorithm is easy to understand, easy to implement and attractive from a view-point of engineering .Numerical simulation proved the effectiveness of the controller in compensating voltage flicker. Furthermore, a modified self-charging technique is used for maintaining dc bus voltage, which does not use PI controller.

Keywords: *Voltage flicker, Synchronous Reference Frame algorithm, Artificial Neural Network, Distribution Static Synchronous Compensator (DSTATCOM).*

1. Introduction

In the past, equipment used to control industrial process was mechanical in nature, being rather tolerant of voltage disturbances, such as voltage sags, spikes, harmonics, etc. In order to improve the efficiency and to minimize costs, modern industrial equipment typically uses a large amount of electronic components, such as programmable logic controllers (PLC), adjustable speed drives (ASD), power supplies in computers, and optical devices. Nevertheless, such pieces of equipment are more susceptible to malfunction in the case of a power system disturbance than traditional techniques based on electromechanical parts (V.E.Wagner et al., 1990). Minor power disruptions, which once would have been noticed only as a momentary flickering of the lights, may now completely interrupt whole automated factories because of sensitive electronic controllers or make all the computer screens at an office go blank at once. In order to restart the whole production, computers, etc, a considerable time might be necessary (in the range of some hours), implying on significant financial losses to an industry (C.A. Warren et al., 1999). It is thus natural that electric utilities and end-users of electrical power are becoming increasingly concerned about the quality of electric power in distribution systems. The term "power quality" has become one of the most common expressions in the power industry during the current decade (IEEE Std. 1159-1995). The term includes a countless number of phenomena observed in power systems. Although such disturbances have always occurred on the power systems, a great attention has been dedicated to minimize their effects to the end-users, notably large industrial plants (IEEE Std. 493-1997). According to some surveys, voltage sags have become a major power quality problem, resulting in large financial losses to industries. Hence mitigation of voltage flicker gains importance. Voltage flicker mitigation is done by controlling the reactive power flow.

For a given transmission line, the power flow is determined by the line impedance, sending and receiving voltages, and their relative phase-angle. Traditional methods for affecting the power flow are based on mechanically switched elements or mechanically based

* Corresponding author: Sujin P. R

devices, for instance shunt and series capacitors, phase-shifting transformers, and synchronous condenser. Due to their slow response times, such elements do not provide the required compensation during transients and can actually degrade system stability after being subjected to disturbances, e.g. faults. Based on the above mentioned challenges for improving the system performance for distribution and transmission systems, associated to the development of the power semiconductor technology, the concepts of Custom Power (J. Douglas, 1996) and Flexible AC Transmission Systems (FACTS) (N.G. Hingorani, 1988) were introduced to distribution and transmission systems, respectively. A considerable amount of FACTS and Custom Power devices employs forced commutated voltage-source converters as their essential parts. According to the power circuit configurations and connections, the FACTS compensators can be divided into shunt compensators, series compensators and other hybrid combinations. The shunt compensator is connected in parallel to the load and the generated compensation current opposes voltage flicker. The shunt compensator has many configurations. This research work deals with shunt compensator called STATCOM. The term "static" indicates that the compensator is based on solid state power electronic switching devices, without any rotating component. Meanwhile, the term "synchronous" indicates that the compensator has a similar function as an ideal synchronous machine, generating a set of three-phase voltages at fundamental frequency.

From the compensation point of view, flicker is mitigated with the same philosophy as any harmonic current. The main differences are that the arc furnace rating lies often in the MVA range and it produces a low frequency voltage variation. Therefore, the compensator has to be connected in the medium-voltage network and moderate switching frequencies (1-2 kHz) can be employed. By using these switching frequencies, it may be even possible to filter eventual fifth and seventh harmonics generated by other loads connected to the same bus. Besides, the shunt VSC can still be used for correction of power factor (T. Larsson et al., 1999). Due to the compensation of low frequency components, the DC capacitor should be made sufficiently large in order to avoid large DC voltage fluctuations that might jeopardize the proper operation of the switching scheme of the voltage source converter. The control strategy adopted to mitigate flicker plays a key role for effective mitigation. Different control algorithms for flicker mitigation are presented in (J. Dolezal et al., 2005). A new technique based on a novel control algorithm, which extracts the voltage disturbance to suppress the voltage flicker, is presented in (R. Mienski et al., 2009, Amit K et al., 2010). The technique is to use DSTATCOM for voltage flicker compensation to overcome the aforementioned problems related to other techniques. The concept of instantaneous reactive power components is used in the controlling system. The design and control strategy based on the instantaneous power calculation are detailed in (Sedraoui.K et al., 2011). SRM algorithm is commonly used for harmonic filtering. This algorithm relies on park transformations to transform the three phase system from a stationary reference frame into synchronously rotating direct, quadrature and zero sequence components. These can easily be analyzed since the fundamental frequency component is transformed into DC quantities. The active and reactive components of the system are represented by the direct and quadrature components respectively. This algorithm can be used for voltage flicker mitigation. The computation is instantaneous but incurs time delays in filtering the DC quantities. The presence of these integral loops incorporates time delays, which depend on the frequency response of special feed forward and feedback integrators. In order to overcome these drawbacks, ANN based control algorithm for voltage flicker mitigation is proposed in this paper. Feed forward back propagation neural network architecture is used. The SRF algorithm is used for generating training data. Back propagation algorithm is used for training the ANN. Furthermore, a modified self-charging technique is used for maintaining dc bus voltage, which does not use PI controller.

2. DSTATCOM for flicker mitigation

The DSTATCOM is shunt connected, solid state switching power converter that exchanges reactive current with the distribution system. A DSTATCOM (Distribution Static Compensator), which is schematically depicted in fig. 1, consists of a two-level Voltage Source Converter (VSC), a dc energy storage device, a coupling transformer connected in shunt to the distribution network through a coupling transformer. The VSC converts the dc voltage across the storage device into a set of three-phase ac output voltages. These voltages are in phase and coupled with the ac system through the reactance of the coupling transformer. Suitable adjustment of the phase and magnitude of the D-STATCOM output voltages allows effective control of active and reactive power exchanges between the D-STATCOM and the ac system. Such configuration allows the device to absorb or generate controllable active and reactive power. The shunt injected current Ish of DSTATCOM can be written as,

$$I_{sh}\angle\eta = I_L\angle-\theta - \frac{V_{th}}{Z_{th}}\angle(\delta-\beta) + \frac{V_L}{Z_{th}}\angle(-\beta) \quad (1)$$

The complex power injection of the D-STATCOM can be expressed as,

$$S_{sh=}V_L I_{sh}^* \quad (2)$$

The most common scheme used to switch on and off the semiconductors is a pulse-width-modulated (PWM) scheme to generate higher than fundamental frequency currents for injection into the distribution system. This injection of high frequency current allows the DSTATCOM to provide harmonic load current compensation. By regulating the output voltage of the inverter, the reactive power injected into or absorbed from the system can be controlled and as in the SVC, in such a way that the reactive current variations of the system load compensator are kept as small as possible, mitigating

voltage fluctuations. Connecting the compensator to an energy storage device gives it an additional ability to regulate active power flow in the system. The DSTATCOM can be installed at the distribution feeder or transmission feeder in the power system. However, the voltage boost of the point with which the DSTATCOM is connected, will be more notable when DSTATCOM is connected to distribution level. This is due to the influence of the inductance of the upstream transformer. Therefore, DSTATCOM for voltage flicker mitigation is usually used at the distribution level in the power system, so called DSTATCOM. An arrangement of DSTATCOM is shown in fig. 1. The DSTATCOM with DC capacitor can inject reactive power at the point of common coupling. The phasor diagram of DSTATCOM connected AC system is shown in fig. 2.

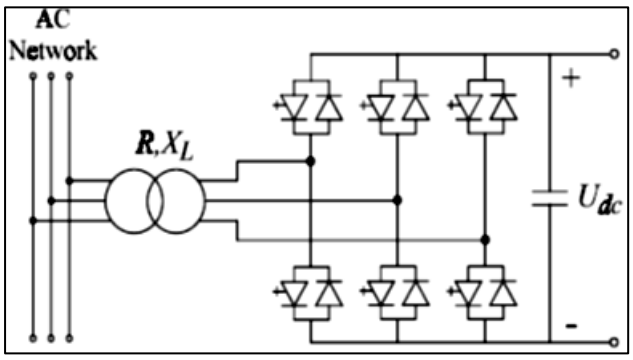

Fig. 1 DSTATCOM connected at PCC

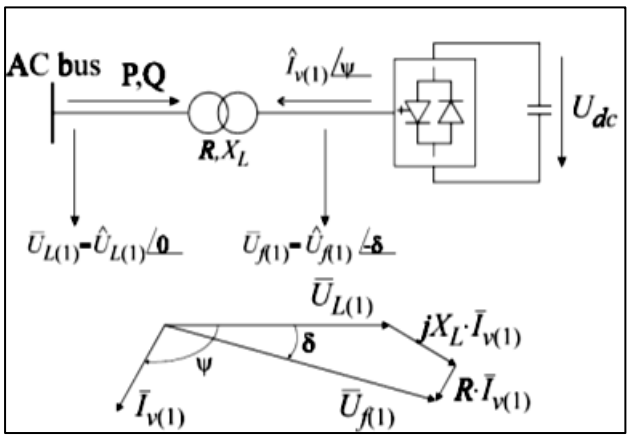

Fig. 2 Phasor representation and diagram of DSTATCOM connected to the AC system

3. Modified SRF algorithm for flicker mitigation

SRM algorithm is commonly used for harmonic filtering. This algorithm relies on park transformations to transform the three phase system from a stationary reference frame into synchronously rotating direct, quadrature and zero sequence components. These can easily be analyzed since the fundamental frequency component is transformed into DC quantities. The active and reactive components of the system are represented by the direct and quadrature components respectively. This algorithm can be modified to suit voltage flicker mitigation.

The phase voltages (V_a, V_b, V_c) at PCC are sensed and given as input (V_{abc}) to SRF controller. The controller performs 3-ϕ to 2- ϕ conversion using equation (3) and the resultant variables V_d and V_q are expected to be pure dc if there is no flicker in input voltage. The oscillating components in V_d and V_q corresponds to voltage flicker component which is to be supplied by the series converter of UPFC. In order to separate the oscillating components of V_d and V_q, dc components are separated using low pass filter (LPF) and the same is subtracted from V_d and V_q to get oscillating components V_d* and V_q^1*.

$$\begin{bmatrix} v_d \\ v_q \end{bmatrix} = \sqrt{\frac{2}{3}} \begin{bmatrix} 1 & -\frac{1}{2} & -\frac{1}{2} \\ 0 & \sqrt{\frac{3}{2}} & -\sqrt{\frac{3}{2}} \end{bmatrix} \cdot \begin{bmatrix} v_a \\ v_b \\ v_c \end{bmatrix} \tag{3}$$

$$\begin{bmatrix} v_a^* \\ v_b^* \\ v_c^* \end{bmatrix} = \sqrt{\frac{2}{3}} \cdot \begin{bmatrix} 1 & -\frac{1}{2} & -\frac{1}{2} \\ 0 & \sqrt{\frac{3}{2}} & -\sqrt{\frac{3}{2}} \end{bmatrix}^T \cdot \begin{bmatrix} v_d^* \\ v_q^* \end{bmatrix} \tag{4}$$

To regulate the dc link capacitor voltage at the desired level, real power has to be drawn by the shunt converter of UPFC from the supply side to charge the capacitor. The simple control algorithm is developed which does not use PI controller. To regulate the dc capacitor voltage at the desired level, an additional real power has to be drawn by the DSTATCOM from the supply side to charge the two capacitors. The energy 'E' stored in each capacitor can be reprinted as

$$E = \tfrac{1}{2} C V_{dc}^{\,2} \tag{5}$$

Where 'C' is the value of each capacitor and V_{dc} is the voltage of each capacitor. If the desired level of voltage across each capacitor is $V_{dc(ref)}$, the energy for capacitor is

$$E' = \tfrac{1}{2} C V_{dc(ref)}^{\,2} \tag{6}$$

The difference between E¹ and E represents the additional energy required by capacitor to reach the desired voltage level. Thus

$$\Delta E = E^{|} - E = \tfrac{1}{2} C \left\{ V_{dc(ref)}^{\,2} - V_{dc}^{\,2} \right\}. \tag{7}$$

On the other hand the charging energy E_{ac} delivered by the three phase supply side to the inventor of each capacitor will be

$$E_{ac} = 3pt$$

$$= 3(V_{rms} I_{dc(rms)} \cos\Phi)t. \tag{8}$$

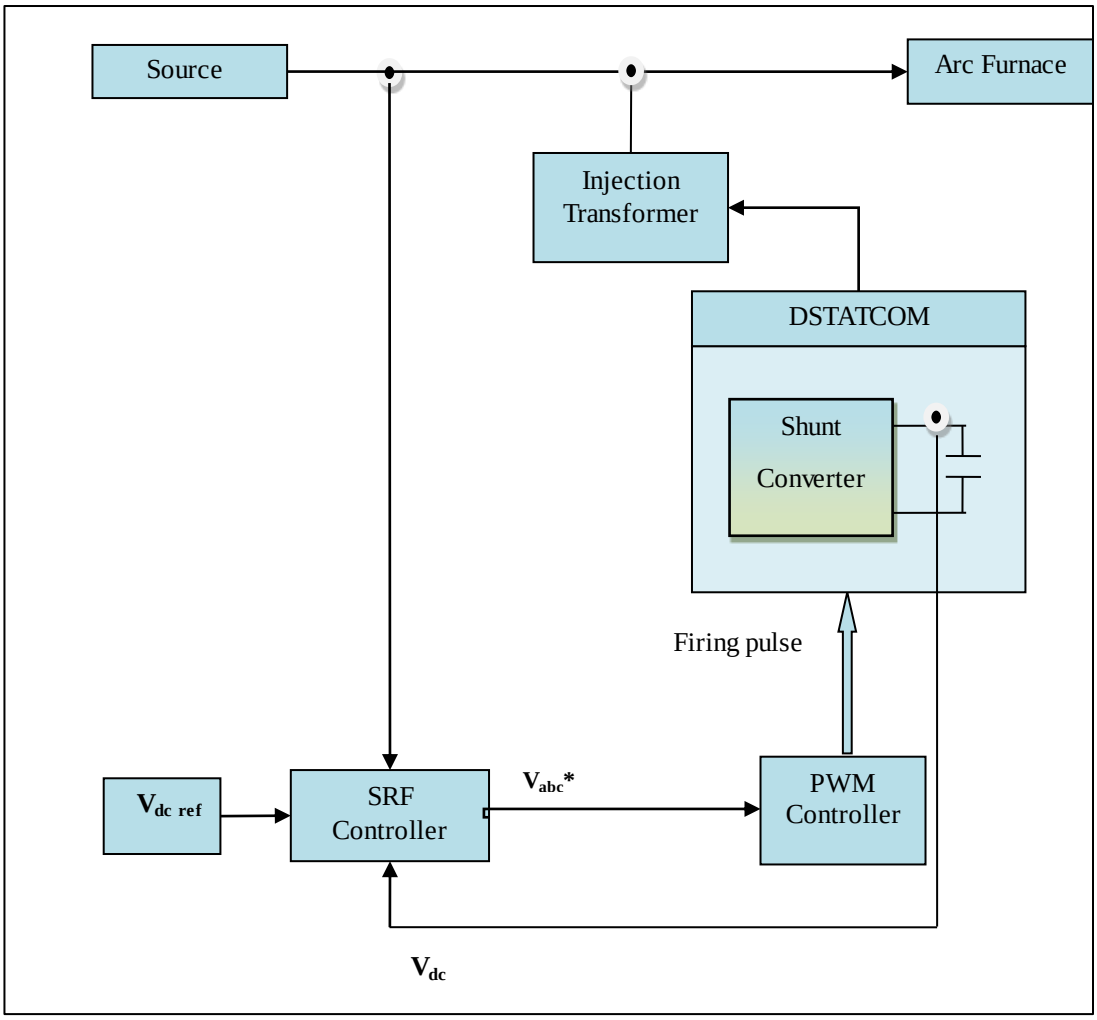

Fig. 3 DSTATCOM for flicker mitigation

p- Additional real power required ; V_{rms}– RMS value of the instantaneous supply voltage

$I_{de(rms)}$ - RMS value of the instantaneous charging current ;

t– Charging time.

Φ- Phase deference between the supply voltage and charging current

Here '*t*' can be defined as T/2 since the charging process only takes place for half a cycle for each capacitor, where 'T' is the period of supply frequency. By using Phase Lock Loop (PLL) the charging current is made in phase with the supply voltage. Thus, power factor cos*Φ=1*. Also the RMS value can be expressed in terms of maximum values. This result in

$$E_{ac} = 3\frac{V}{\sqrt{2}}\frac{I_{dc}}{\sqrt{2}}\frac{T}{2}. \quad (9)$$

$$E_{ac} = \frac{3VI_{dc}T}{4} \quad (10)$$

Neglecting the switching losses in the inverter and according to the energy conservation law the following equation holds

$$\Delta E = E_{ac}$$

$$\frac{1}{2}C\left\{V_{dc(ref)}{}^{2} - V_{dc}{}^{2}\right\} = \frac{3VI_{dc}T}{4} \quad (11)$$

$$I_{dc} = 2C\frac{\left\{[V_{dc}(ref)]^2 - [V_{dc}]^2\right\}}{3VT} \quad (12)$$

The self-charging circuit block in fig. 4 receives the voltage sensed from dc bus of DSTATCOM (V_{dc}) and the desired value of dc bus voltage (V_{dcref}). This block computes I_{dc} using equation (12) and the output I_{dc} is fed to amplifier block (Amp). The output from amplifier block is added with V_q^1* to get V_q*. The oscillating components V_d* and V_q* are converted from 2-ϕ to 3-ϕ using equation (4). The resulting signal V_{abc}* (V_a*, V_b*, V_c*) is given to PWM controller for producing firing pulses for DSTATCOM which mitigates voltage flicker and simultaneously maintains dc bus voltage.

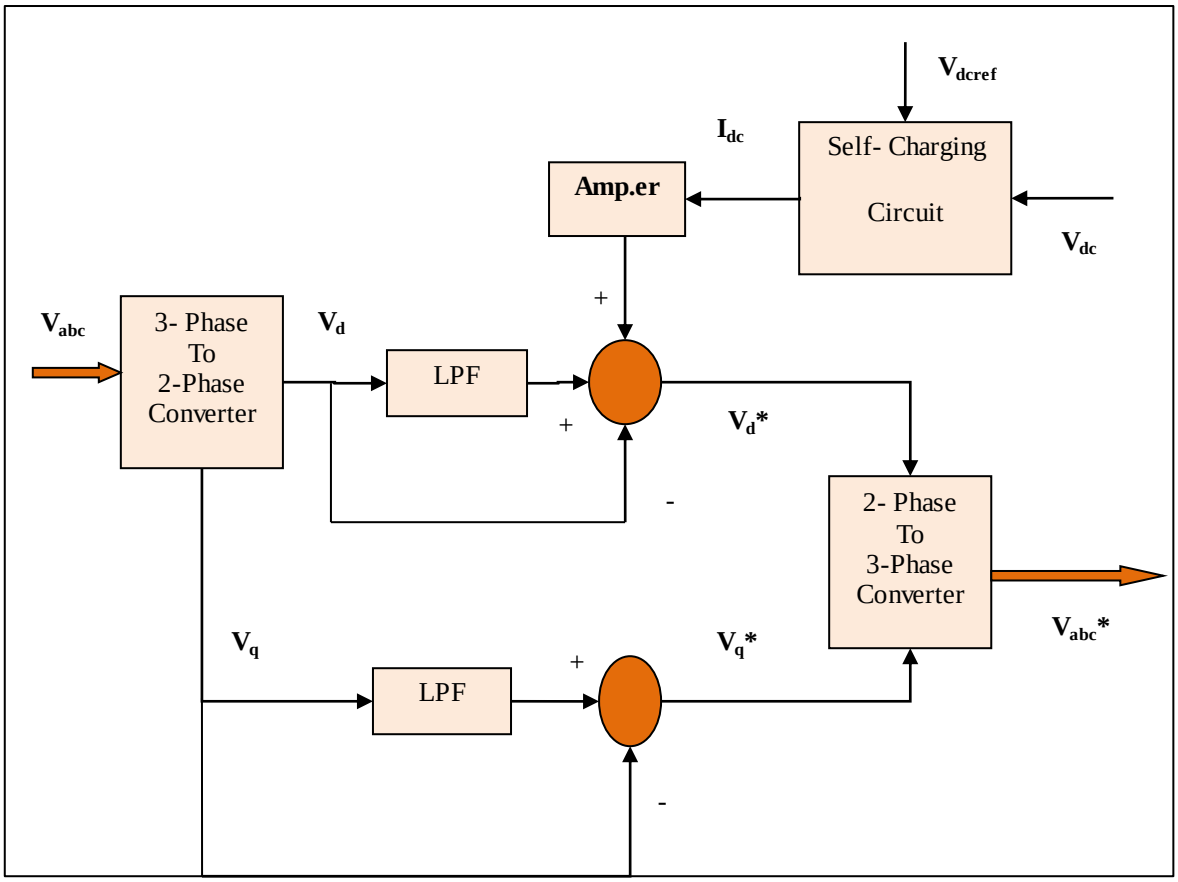

Fig. 4 Modified SRF controller for flicker mitigation

4. ANN based controller for flicker mitigation

The computations in SRF algorithm are instantaneous but incur time delays in filtering the DC quantities. The presence of these integral loops incorporates time delays, which depend on the frequency response of special feed forward and feedback integrators. In order to overcome these drawbacks, ANN based control algorithm for voltage flicker mitigation is proposed in this paper. Artificial Neural Networks are predictive models loosely based on the action of biological neurons. The neural network used for flicker mitigation is full-connected, three layer, feed-forward, back propogation network shown in fig. 5. The input layer has three neurons. The three phase voltages (V_a, V_b, V_c) at PCC are sensed and given as input to ANN. Vector of predictor variable values is presented to the input layer. The input layer standardizes these values so that the range of each variable is -1 to 1. The input layer distributes the values to each of the neurons in the hidden layer. There is only one hidden layer with three neurons. Arriving at a neuron in the hidden layer, the value from each input neuron is multiplied by a weight, and the resulting weighted values are added together producing a combined value. The weighted sum is fed into a transfer function, σ, which outputs a value. The outputs from the hidden layer are distributed to the output layer. Arriving at a neuron in the output layer, the value from each hidden layer neuron is multiplied by a weight, and the resulting weighted values are added together producing a combined value. The weighted sum is fed into a transfer function, σ, which outputs a value. These values are the outputs of the network. There are three neurons in the output layer which gives the reference voltages (V_a*, V_b*, V_c*) to PWM controller which in turn produces firing pulses for UPFC.

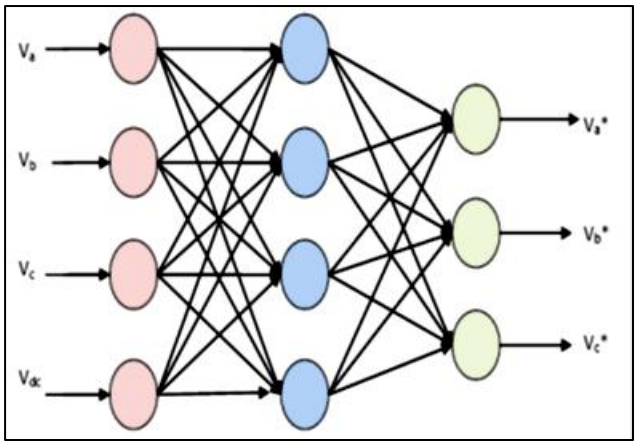

Fig. 5 ANN based controller for flicker mitigation

5. Training of ANN

The goal of the training process is to find the set of weight values that will cause the output from the neural network

to match the actual target values as closely as possible. Using flicker generator in MATLAB, flicker of various magnitude are generated and the corresponding reference signals are produced using SRF controller. These data are used for training the ANN. For fast convergence, back propagation training algorithm is used.

Given a set of randomly selected starting weight values, conjugate gradient algorithm is used to optimize the weight values. Most training algorithms follow this cycle to refine the weight values:

- Run a set of predictor variable values through the network using a tentative set of weights.
- Compute the difference between the predicted target value and the actual target value for this case.
- Average the error information over the entire set of training cases.
- Propagate the error backward through the network and compute the gradient (vector of derivatives) of the change in error with respect to changes in weight values.
- Make adjustments to the weights to reduce the error. Each cycle is called an epoch.

Because the error information is propagated backward through the network, this type of training method is called backward propagation.

6. Simulation studies

An arc furnace installation mostly consists of a large arc furnace used for melting scrap and a smaller ladle furnace used for the refining of the steel. The large arc furnace is creating the major part of the flicker problems. Usually the installation also contains some kind of compensating equipment to reduce the line disturbances caused by the furnace operation. The disturbances from the arc furnace are transferred to other users of electric energy via the Point of Common Connection, PCC. The voltage fluctuations causing flicker are then spread in the grid from the PCC with very low damping. The simplified representation of system with DSTATCOM controller is shown in fig. 3. Two transformers, T_1 and T_2, are included in the system and the simplified line diagram is shown in fig. 6. T_1 (S_{N1} = 130 MVA, X_{T1}=11 %) is the transformer supplying power to the arc furnace bus. The nominal voltage on the bus between T_1 and T_2 is 31,5 KV. T_2 (S_{N2} = 100 MVA, X_{T2}=8 %) is the transformer in arc furnace. The system has been simplified such that the model contains only the large arc furnace. At the top of fig.6, the grid with a nominal short circuit power of 3600 MVA is shown. The arc furnace model is shown in fig. 7. Voltage waveform at PCC, real and reactive power of arc furnace is shown in fig. 8. Simulation studies are done on the system with modified SRF controller and ANN based controller. The results obtained in both case are same and is shown in fig. 10. The rms value of voltage at PCC before installation of DSTATCOM is shown in fig. 9. The performance of self- charging circuit is evident from fig. 11 which shows the dc bus voltage.

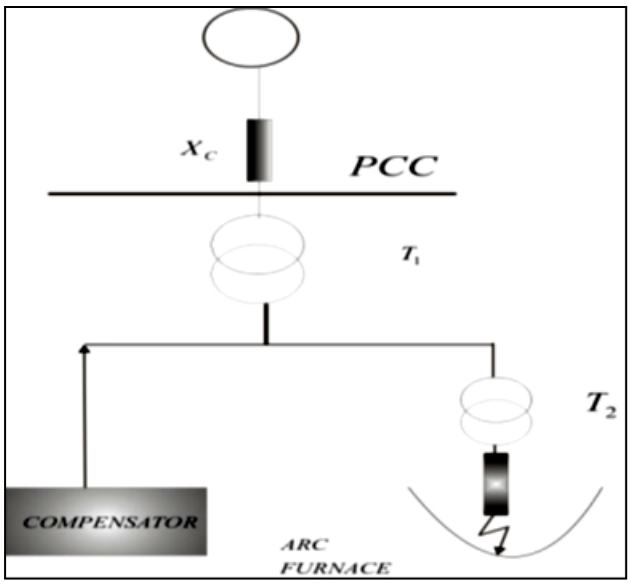

Fig. 6 Typical arc furnace installations

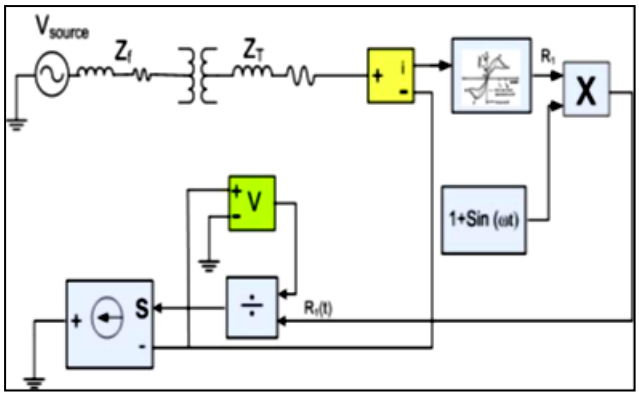

Fig. 7 Model of arc furnace

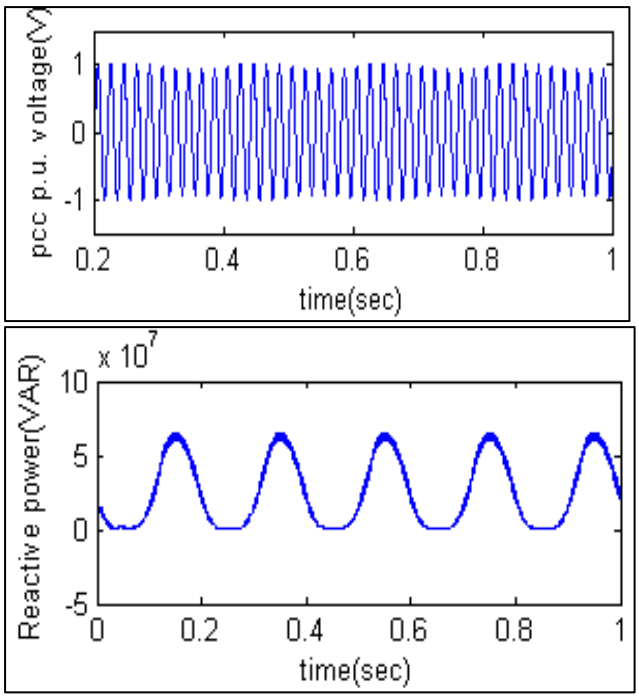

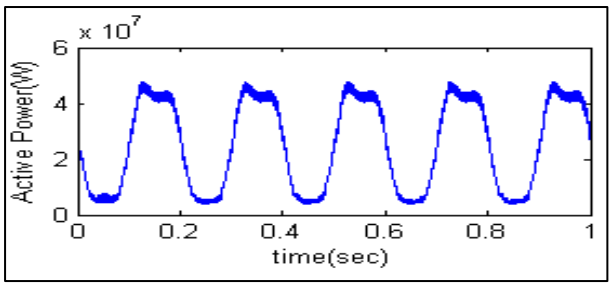

Fig. 8 Voltage wave form at PCC, real and reactive power drawn by arc furnace

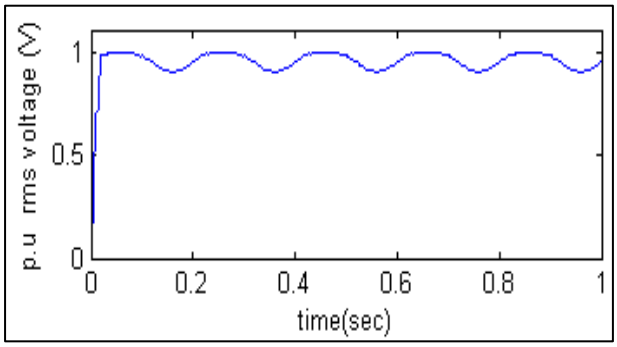

Fig. 9 RMS value of voltage at PCC without DSTATCOM

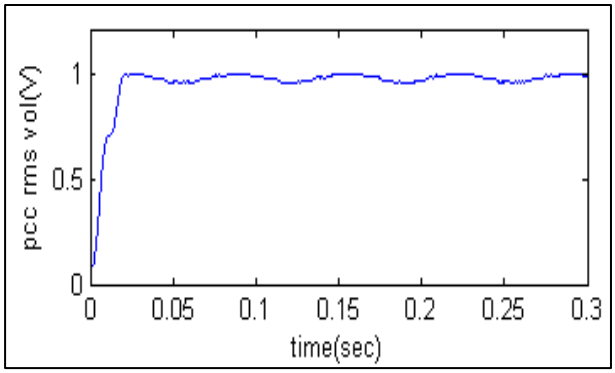

Fig. 10 RMS value of voltage at PCC with DSTATCOM

and is 0.3% which is within IEEE threshold limits, when DSTATCOM is connected at the PCC

7. Conclusion

The basic control structure and functional control of DSTATCOM is discussed. SRF controller used for harmonic filtering is modified to mitigate flicker using DSTATCOM. The computations in SRF algorithm are instantaneous but incur time delays in filtering the DC quantities. The presence of these integral loops Flicker is

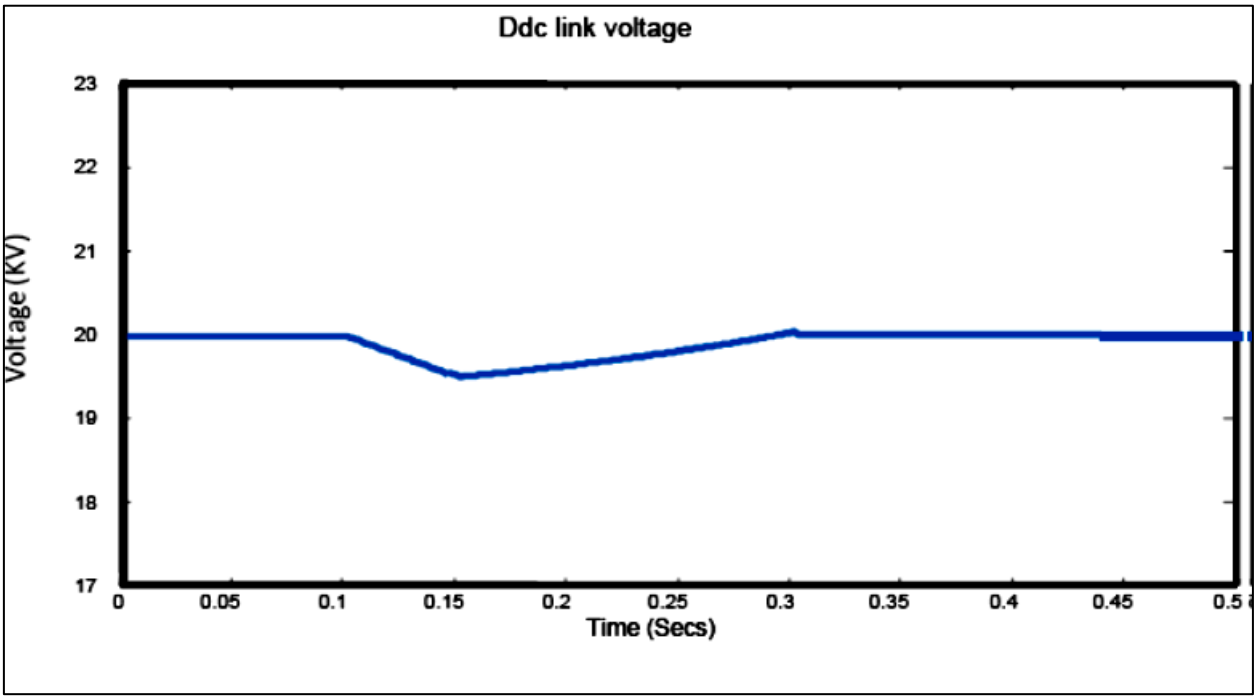

Fig. 11 DC bus voltage

The dc-link voltage is presented in fig. 11 shows an initial drop at the start of DSTATCOM to compensate voltage flicker and is brought towards reference within a short time. The initial drop is due to sudden power change and initially, this power is supplied from the dc-link energy storage and the shunt controller takes a certain time to react to the change in energy. Voltage flicker without DSTATCOM is about 9% (ΔV/V). Flicker is mitigated mitigated and is 0.3% which is within IEEE threshold limits, when DSTATCOM is connected at the PCC. In order to overcome these drawbacks, ANN based control algorithm for voltage flicker mitigation is proposed in this

paper. Since the controls do not include any parameter which is dependent on network condition, the performance of such controller is robust with respect to network structure, fault location and system loading. The control structure is decentralized and does not need any coordination with other compensating devices. The structure of proposed algorithm is easy to understand, easy to implement and attractive from a view-point of engineering. The model is simulated in MATLAB/SIMULINK platform and DSTATCOM controller's performance is evaluated. Numerical simulation proved the effectiveness of the controller in compensating voltage flicker.

References

V.E. Wagner, A.A. Andreshak, and J.P. Staniak (1990), Power Quality and Factory Automation, *IEEE Trans. on Power Delivery*, Vol. 26, No. 4, pp. 620-626.

C.A. Warren, T.A. Short, J.J. Burke, H. Morosini, C.W. Burns, and J. Storms (1999), Power Quality at Champion Paper – The Myth and the Reality, *IEEE Trans. on Power Delivery*, Vol. 14, No. 2, pp. 636-641.

IEEE Std. 1159-1995 (1995), *IEEE Recommended Practice for Monitoring Electric Power Quality*.

IEEE Std. 493-1997 (1997), *IEEE Recommended Practice for the Design of Reliable Industrial and Commercial Power Systems*.

J. Dougla (1996), Custom Power: Optimizing Distribution Services, *EPRI Journal*, Vol. 21, No. 3, pp. 6-15.

N.G. Hingorani (1988), High Power Electronics and Flexible AC Transmission, *IEEE Power Engineering Review*, Vol. 8, No. 7, pp. 3-4.

T. Larsson and C. Poumarède (1999), STATCOM, an Efficient Means for Flicker Mitigation,*IEEE Power Engineering Society 1999 Winter Meeting*, Vol. 2, pp. 1208-1213, New York-NY, USA.

J. Dolezal, A. G. Castillo, V. Valouch (2005),Topologies and control of active filters for flicker compensation, *International Symposium on Industrial Electronics, IEEE Proceedings*, Vol.1, pp. 90-95.

R. Mienski, R. Pawelek, I. Wasiak (2009), Shunt Compensation for Power Quality Improvement using a STATCOM controller: Modelling and simulation, *IEE Proc.-Gener. Transm. Distrib*., No.2,Vol.151, pp. 274-280.

Amit K. Jain, Aman Behal, Ximing, Darren M. Dawson, NedMohan (2010), Nonlinear Controller for Fast Voltage Regulation Using STATCOMs, *IEEE Transaction on control systems technology*, No.6, Vol.12, pp. 827-842.

Sedraoui.K., Al-haddad, K.,Olivier, G. (2011), Flicker Compensation in Arc Furnace Power systems Using the UPFC, *IEEE International Symposium on Industrial Electronics*.